Cisal
TEL. (+39) 0322 918111
MAIL. cisal@cisal.it

Chromotherapy control panel and control unit WELLNESS_ZS0C0330

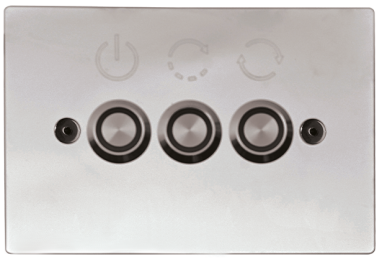

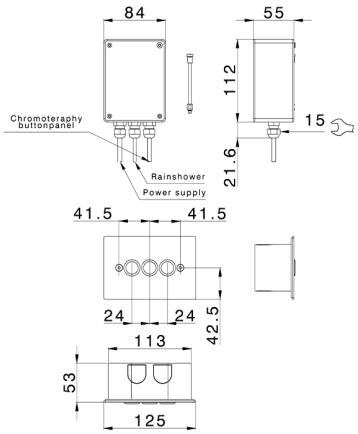

MODEL **ZS0C0330**

Chromotherapy control panel and control unit,built-in installation,Stainless Steel AISI 304

AVAILABLE FINISHINGS

D1 D1 Brushed Inox

40 40 Matt Black

4Q 4Q Matt White

D2 D2 Polished Inox

CHARACTERISTICS

2026-01-13

© 2021 Cisal. Via Pietro Durio 160 - 28010 - Alzo (NO) - Italia
Mail: cisal@cisal.it, Telefono: (+39) 0322 918111, P.Iva IT02422810032.