Cisal
TEL. (+39) 0322 918111
MAIL. cisal@cisal.it

Single lever sink mixer with extrac.shower KITCHEN_EU003570

cisal

EU 00357

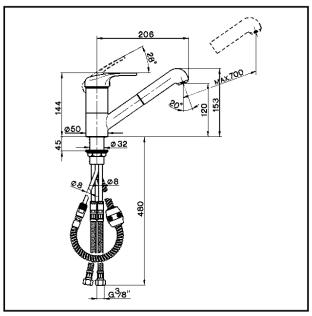

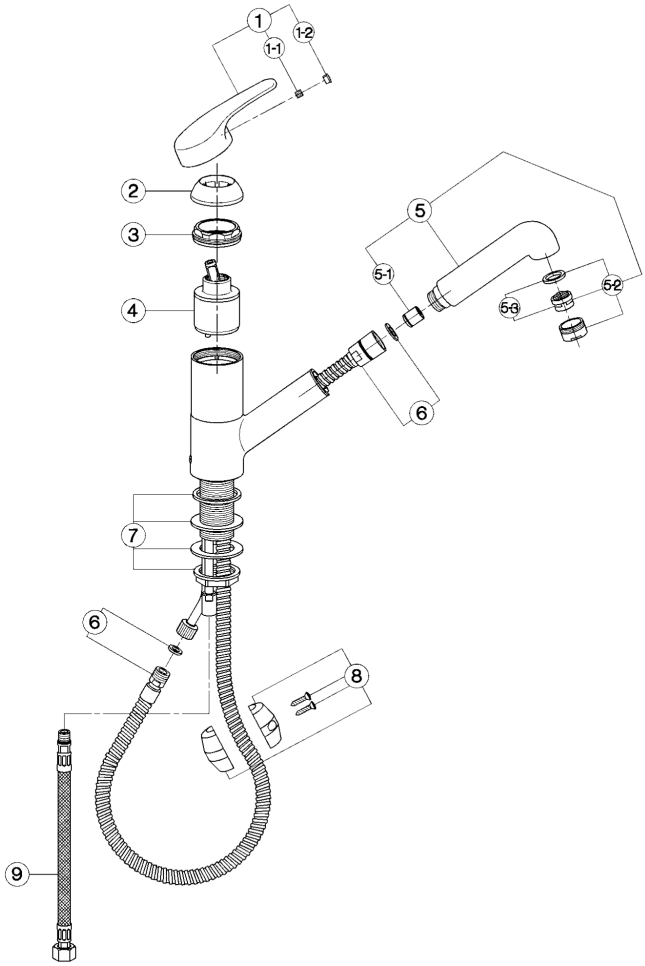

- **Monocomando lavello**
- ***Single lever sink mixer***
- **Einhand-Spültischbatterie**
- ***Mitigeur évier***

bar	PORTATA BOCCA DI EROGAZIONE * *SPOUT FLOW RATE* DURCHFLUSS WANNENEINLAUF *DÉBIT BEC DÉVERSEUR* l/min.
0.5	4
1	6
2	8.5
3	11
4	13
5	14.5

* con resistenza silenziosa della classe di portata A (15 l/min. a 3 bar)
with hydraulic resistance of flow rate class A (15 l/min. at 3 bar)
mit geräuscharmen Widerstand der Durchflussklasse A (15 l/min. bei 3 bar)
avec aérateur classe A (15 l/min. à 3 bar)

NR.	DESCRIZIONE *DESCRIPTION* BESCHREIBUNG *DÉSCRIPTION*	N. CODICE *CODE NO.* WERKSNR. *NR. CODE*
1	Leva monocomando "EU" *Lever "EU"* Hebel "EU" *Levier "EU"*	ZZ 92857 0
1-1	Grano punta piana inox M.6x6 *Screw-stainless steel M.6x6* Madenschraube M.6x6 *Vis speciale inox M.6x6*	ZZ 92645 0
1-2	Placchetta per leva *Cap for lever* Abdeckkappe f/Hebel *Plaquette levier*	ZZ 92710 0
2	Copricartuccia con ideogrammi *Escutcheon cartridge with ideogram* Abdeckkappe mit Ideogramm *Couvre-cartouche avec ideogramme*	ZZ 92716 0
3	Calotta bloccaggio cartuccia piccola *Nut for mixing valve-small* Mutter f/Kartusche *Ecrou pour cartouche*	ZZ 92603 0
4	Cartuccia monocomando piccola *Mixing valve - small size* Kartusche *Cartouche mitigeurs*	ZZ 92909 0

NR.	DESCRIZIONE *DESCRIPTION* BESCHREIBUNG *DÉSCRIPTION*	N. CODICE *CODE NO.* WERKSNR. *NR. CODE*
5	Doccia estraibile lavello con valvolina *Handspray with valve* Herausziehbare Brause *Douchette extr. évier*	ZZ 92833 0
5-1	Valvola anti-ritorno Ø15 per doccia *Back-flow valve Ø15* Durchflussverhinderer Ø15 *Clapet anti-retour Ø15*	ZZ 92956 0
5-2	Aeratore M.24x1 IA *Mousseur M.24x1 IA* Perlator M.24x1 IA *Mousseur M.24x1 IA*	ZZ 92836 0
5-3	Cartuccia per aeratore M. 24x1 *Mousseur cartridge M.24x1* Kart. f/Perlator M.24x1 *Cartouche x mousseur M.24x1*	ZZ 92695 0
6	Flessibile 150 cm Ø14 1/2"cn x M.15x1 *Flex 150 cm Ø14 1/2"CN x M.15x1* Brauseschlauch 150 cm Ø14 1/2" x M.15x1 *Flex 150 cm Ø14 1/2"cn x M.15x1*	ZZ 92774 0
7	Set installazione monoc.doccia estraibile *Installation set single lever* Befestigungsset *Set installation*	ZZ 92886 0

NR.	DESCRIZIONE *DESCRIPTION* BESCHREIBUNG *DÉSCRIPTION*	N. CODICE *CODE NO.* WERKSNR. *NR. CODE*
8	Peso piombo completo *Lead weight* Bleigewicht kpl *Poids en plomb*	ZZ 92775 0
9	Flessibile M.11x1 3/8"F L.365 *Flex M.11x1 3/8" L.365* Anschlussschlauch M.11x1 3/8" L.365 *Flex M.11x1 3/8" L.365*	ZZ 92842 0

EU.21

EU003570 https://en.cisal.it/single-lever-sink-mixer-with-extrac-shower-kitchen-eu003570

2026-04-29

© 2021 Cisal. Via Pietro Durio 160 - 28010 - Alzo (NO) - Italia
Mail: cisal@cisal.it, Telefono: (+39) 0322 918111, P.Iva IT02422810032.