Cisal
TEL. (+39) 0322 918111
MAIL. cisal@cisal.it

Single lever bidet mixer ROADSTER ACCENT_RA000550



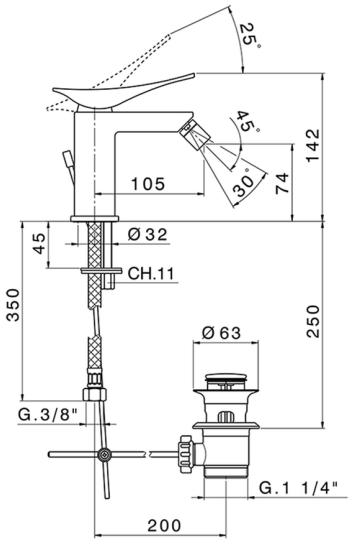

MODEL **RA000550**

Single lever bidet mixer,with 1"1/4 automatic pop-up waste,G.3/8" stainless steel flexible hoses

AVAILABLE FINISHINGS

- **21** 21 Chrome
- **2B** 2B Polished Nickel
- **2F** 2F Brushed Nickel
- **2Q** 2Q Black Titanium
- **40** 40 Matt Black
- **4Q** 4Q Matt White

CHARACTERISTICS

Cartridge Spare Parts **ZZ99663000**

25 mm Cartridge

© 2021 Cisal. Via Pietro Durio 160 - 28010 - Alzo (NO) - Italia
Mail: cisal@cisal.it, Telefono: (+39) 0322 918111, P.Iva IT02422810032.

Single lever bidet mixer ROADSTER ACCENT_RA000550

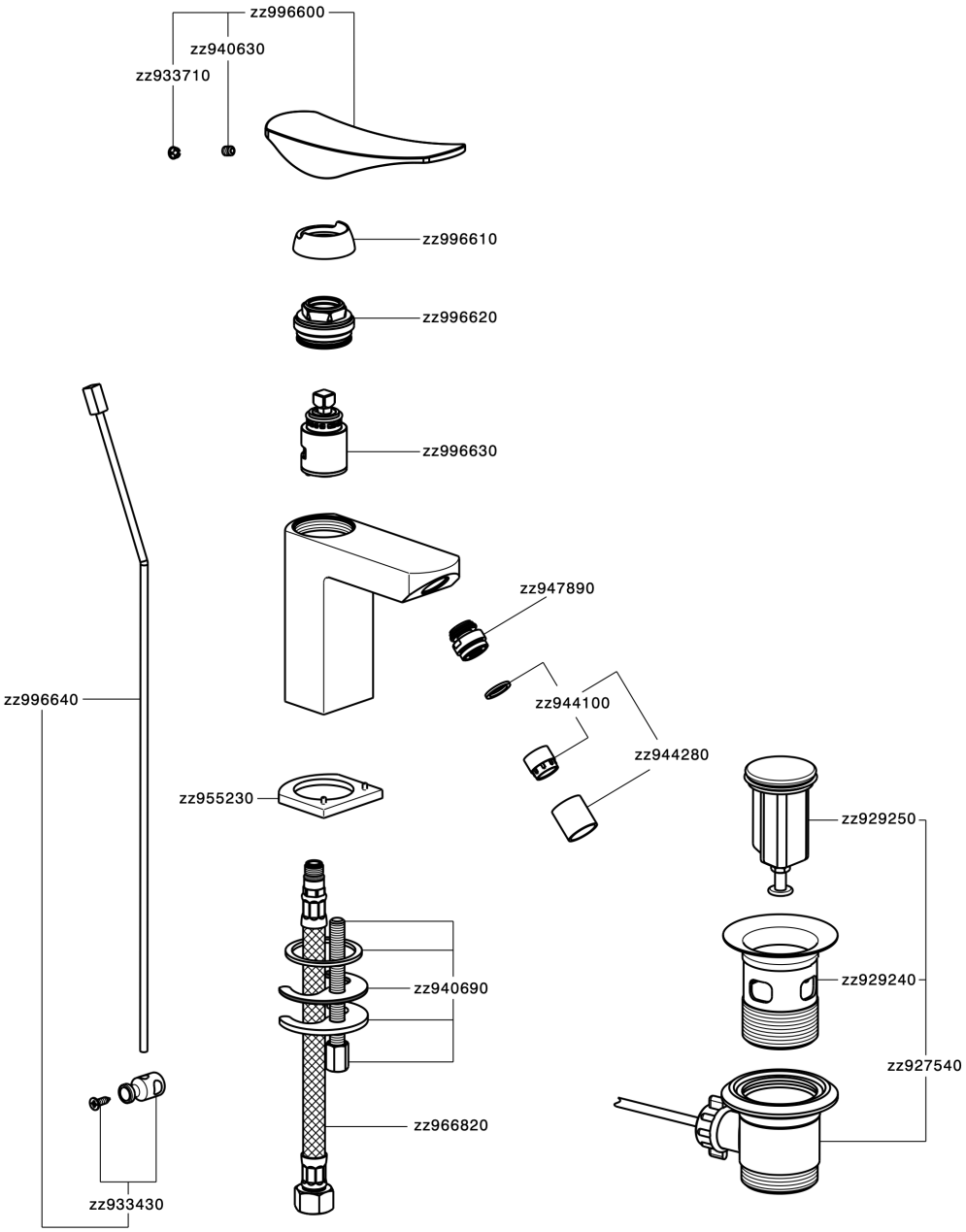

RA000550

https://en.cisal.it/single-lever-bidet-mixer-roadster-accent-ra000550

2026-11-24

© 2021 Cisal. Via Pietro Durio 160 - 28010 - Alzo (NO) - Italia
Mail: cisal@cisal.it, Telefono: (+39) 0322 918111, P.Iva IT02422810032.