Cisal
TEL. (+39) 0322 918111
MAIL. cisal@cisal.it

Single lever shower mixer SLIM_SM000440



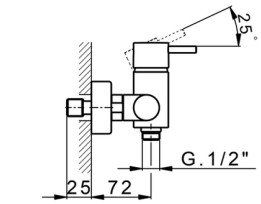

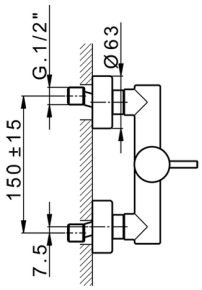

MODEL **SM000440**

Single lever shower mixer,without shower set,1/2" M flexible connection

AVAILABLE FINISHINGS

21 21 Chrome

2B 2B Polished Nickel

40 40 Matt Black

4Q 4Q Matt White

CHARACTERISTICS

Cartridge Spare Parts **ZZ95409000**

35 mm Cartridge

EcoStop

EcoStop feature limits water flow to approximately 50% of maximum output with one point of resistance on setting. Push slightly past the middle stop only when full water output is required. This will save water up to 50%.

© 2021 Cisal. Via Pietro Durio 160 - 28010 - Alzo (NO) - Italia
Mail: cisal@cisal.it, Telefono: (+39) 0322 918111, P.Iva IT02422810032.

Cisal
TEL. (+39) 0322 918111
MAIL. cisal@cisal.it

Single lever shower mixer SLIM_SM000440

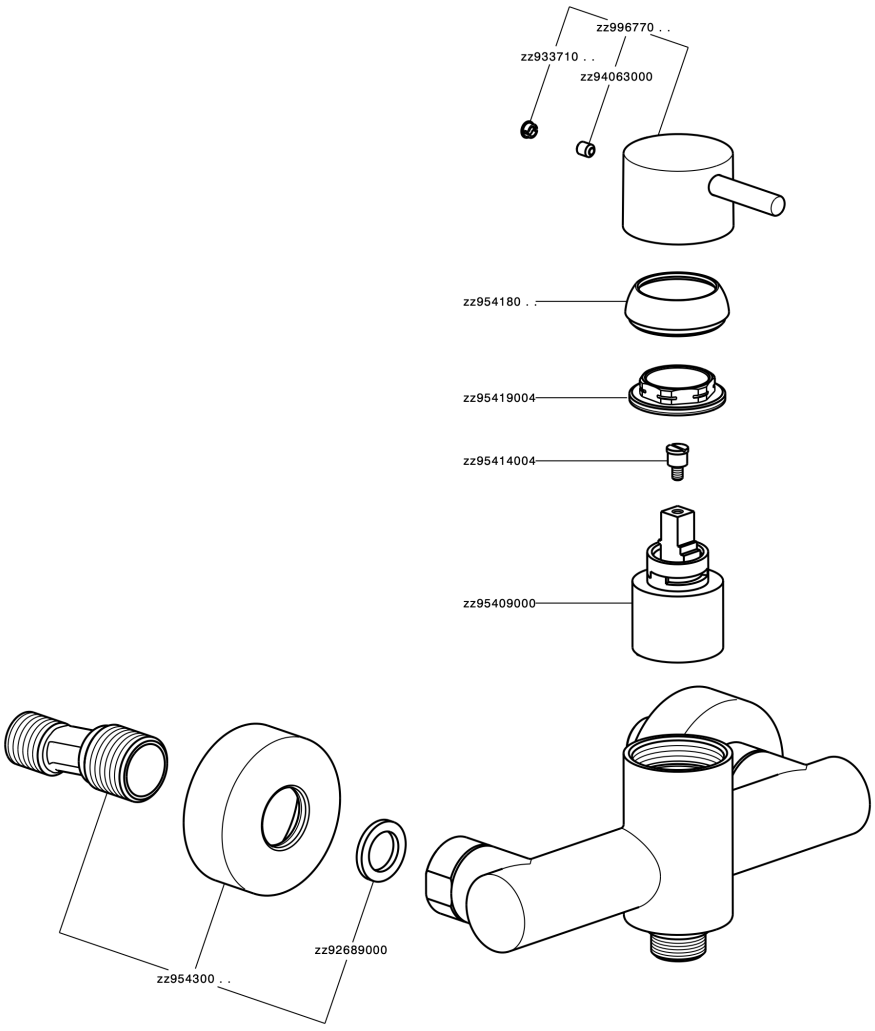

SM000440

https://en.cisal.it/single-lever-shower-mixer-slim-sm000440

2026-11-24

© 2021 Cisal. Via Pietro Durio 160 - 28010 - Alzo (NO) - Italia
Mail: cisal@cisal.it, Telefono: (+39) 0322 918111, P.Iva IT02422810032.