Cisal
TEL. (+39) 0322 918111
MAIL. cisal@cisal.it

Single lever bidet mixer GRACE_GC000550



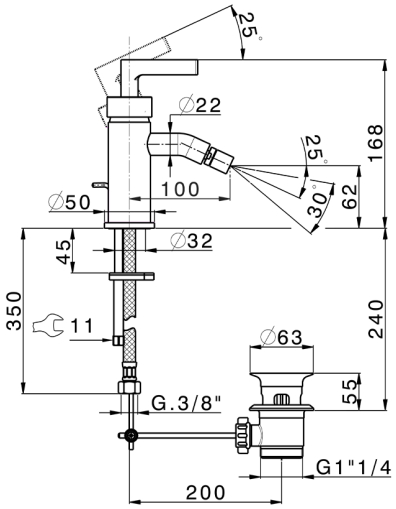

MODEL **GC000550**

Single lever bidet mixer,with 1"1/4 automatic pop-up waste,G.3/8" stainless steel flexible hoses

AVAILABLE FINISHINGS

- **21** 21 Chrome
- **2F** 2F Brushed Nickel
- **2W** 2W Brushed Gold
- **5H** 5H Dark Brass Brushed
- **5L** 5L Brushed Black Titanium
- **6T** 6T Chrome/Matt Black

CHARACTERISTICS

Cartridge Spare Parts **ZZ99672000**

35 mm Cartridge

EcoStop

EcoStop feature limits water flow to approximately 50% of maximum output with one point of resistance on setting. Push slightly past the middle stop only when full water output is required. This will save water up to 50%.

2026-11-23

© 2021 Cisal. Via Pietro Durio 160 - 28010 - Alzo (NO) - Italia
Mail: cisal@cisal.it, Telefono: (+39) 0322 918111, P.Iva IT02422810032.