Cisal
TEL. (+39) 0322 918111
MAIL. cisal@cisal.it

3-functions Thermostatic shower set SHOWER COLUMNS_RAC83010

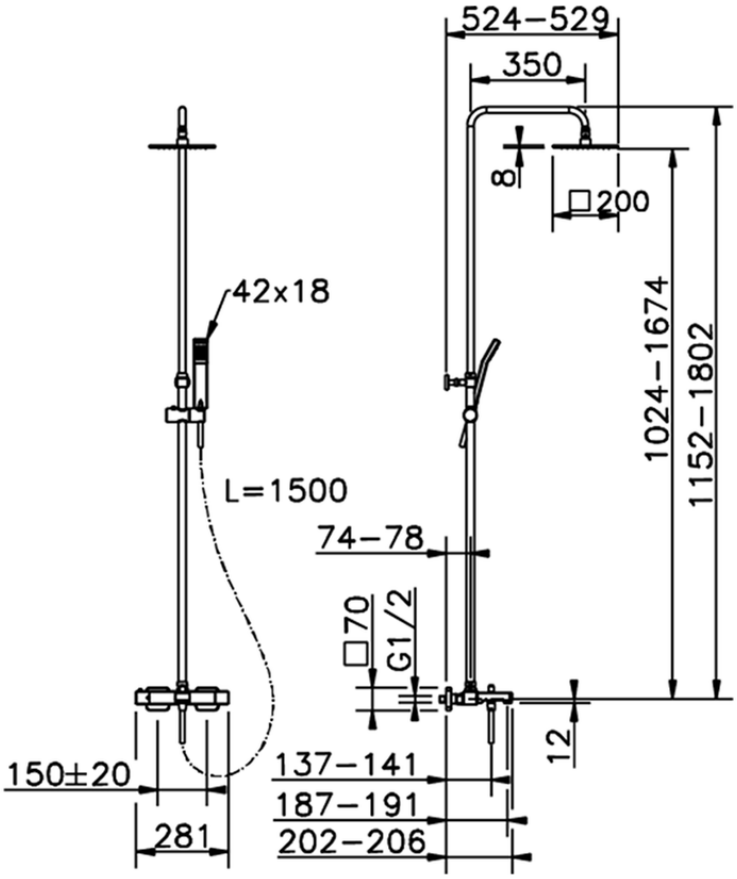

RAC83010

https://en.cisal.it/3-functions-thermostatic-shower-set-shower-columns-rac83010

2026-02-23

© 2021 Cisal. Via Pietro Durio 160 - 28010 - Alzo (NO) - Italia
Mail: cisal@cisal.it, Telefono: (+39) 0322 918111, P.Iva IT02422810032.