Cisal
TEL. (+39) 0322 918111
MAIL. cisal@cisal.it

# Single lever bath mixer, with shower set CHERIE_CH000064

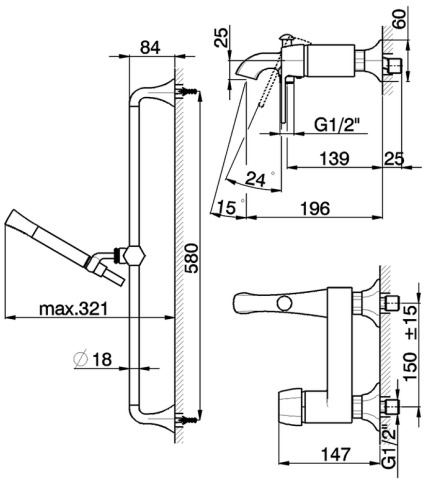


MODEL **CH000064**

Single lever bath mixer, with shower set,58 cm Rail with slide bracket,Chérie Brass one spray handshower,150 cm SUPREME smooth flexible hose

## AVAILABLE FINISHINGS

**6T** 6T Chrome/Matt Black

**7C** 7C Gold/Matt Black

**7D** 7D Polished Nickel/Matt Black

**7E** 7E Rose Gold/Matt Black

## CHARACTERISTICS

Cartridge Spare Parts **ZZ93196000**

**38 mm Cartridge**

2026-05-19

© 2021 Cisal. Via Pietro Durio 160 - 28010 - Alzo (NO) - Italia
Mail: cisal@cisal.it, Telefono: (+39) 0322 918111, P.Iva IT02422810032.