Cisal
TEL. (+39) 0322 918111
MAIL. cisal@cisal.it

3 hole washbasin mixer HI-RISE_RM001020

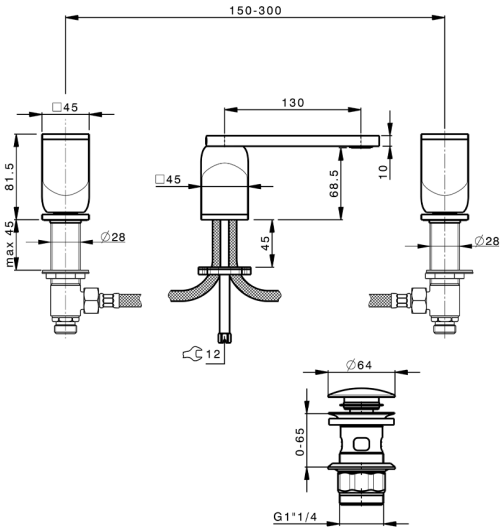

MODEL **RM001020**

3 hole washbasin mixer,with 1"1/4 Click Clack waste,body and handles in marble

AVAILABLE FINISHINGS

- **7S** 7S White Carrara Marble/Brushed Gold
- **7X** 7X White Carrara Marble/Brushed Nickel
- **7Y** 7Y Carrara Marble/Chrome
- **8A** 8A Marquinia Marble/Brushed Gold
- **8B** 8B Marquinia Marble/Gold
- **8D** 8D Black Marquinia Marble/Chrome

CHARACTERISTICS

2026-04-06

© 2021 Cisal. Via Pietro Durio 160 - 28010 - Alzo (NO) - Italia
Mail: cisal@cisal.it, Telefono: (+39) 0322 918111, P.Iva IT02422810032.