Cisal
TEL. (+39) 0322 918111
MAIL. cisal@cisal.it

1 1/4 waste for basin mixer COMPONENTS_ZA001610

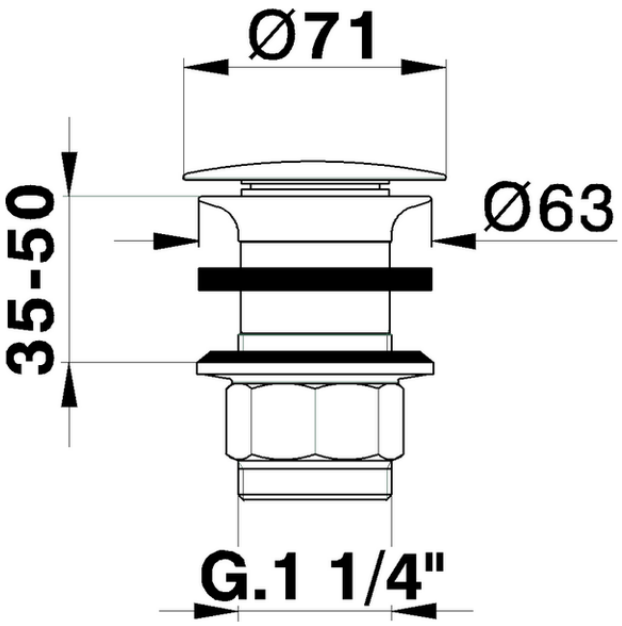

ZA001610

https://en.cisal.it/1-1-4-waste-for-basin-mixer-components-za001610

2026-01-11

© 2021 Cisal. Via Pietro Durio 160 - 28010 - Alzo (NO) - Italia
Mail: cisal@cisal.it, Telefono: (+39) 0322 918111, P.Iva IT02422810032.