Cisal
TEL. (+39) 0322 918111
MAIL. cisal@cisal.it

Exposed part for concealed S.L.bath-shower valve HI-RISE_RI002300

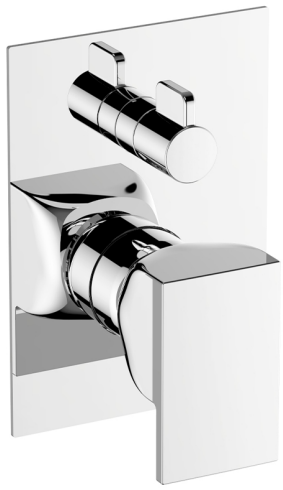

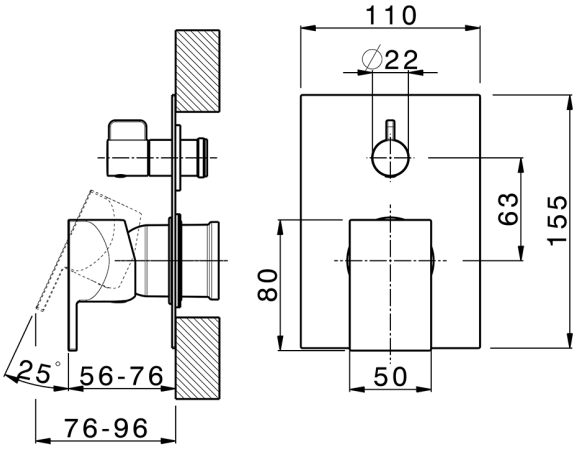

MODEL **RI002300**

Exposed part for concealed S.L.bath-shower valve,2-Way rotating diverter,without concealed part,for items Easy-Box ZA000230

AVAILABLE FINISHINGS

- **21** 21 Chrome
- **24** 24 Gold
- **2F** 2F Brushed Nickel
- **2W** 2W Brushed Gold
- **40** 40 Matt Black
- **4Q** 4Q Matt White
- **5G** 5G Rose Gold
- **6V** 6V Matt White/Brushed Nickel
- **6X** 6X Matt White/Brushed Gold
- **7W** 7W Matt Black/Brushed Gold

CHARACTERISTICS

Installation	**Concealed**
Required concealed parts	**ZA000230**

2026-02-23

© 2021 Cisal. Via Pietro Durio 160 - 28010 - Alzo (NO) - Italia
Mail: cisal@cisal.it, Telefono: (+39) 0322 918111, P.Iva IT02422810032.