Cisal
TEL. (+39) 0322 918111
MAIL. cisal@cisal.it

Arm and Shower Set with wall elbow integrated SHOWER_DS0K0030

MODEL **DS0K0030**

Arm and Shower Set with wall elbow integrated,400 mm shower arm,300 mm round showerhead 2 mm thick INOX,ABS minimalistic one spray handshower,1/2" wall elbow,150 cm smooth SILVERFLEX Flexible Hose

AVAILABLE FINISHINGS

21 21 Chrome

CHARACTERISTICS

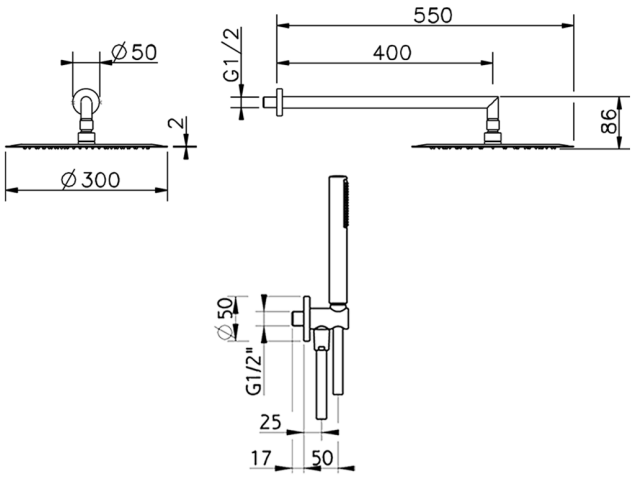

2026-06-13

© 2021 Cisal. Via Pietro Durio 160 - 28010 - Alzo (NO) - Italia
Mail: cisal@cisal.it, Telefono: (+39) 0322 918111, P.Iva IT02422810032.