Cisal
TEL. (+39) 0322 918111
MAIL. cisal@cisal.it

Concealed thermostatic shower mixer ROADSTER ACCENT_RA0KT010

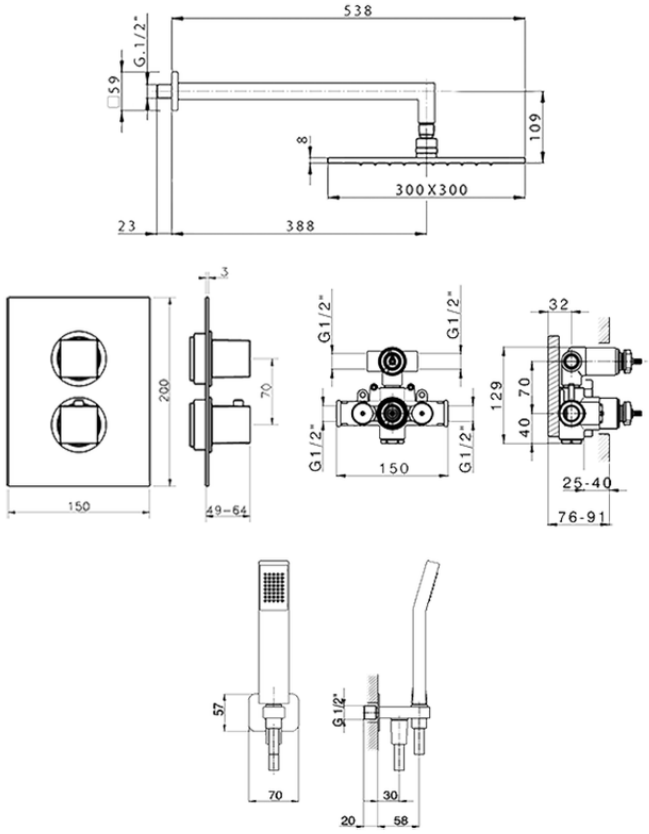

RA0KT010 https://en.cisal.it/concealed-thermostatic-shower-mixer-roadster-accent-ra0kt010

2026-03-17

© 2021 Cisal. Via Pietro Durio 160 - 28010 - Alzo (NO) - Italia
Mail: cisal@cisal.it, Telefono: (+39) 0322 918111, P.Iva IT02422810032.