Cisal
TEL. (+39) 0322 918111
MAIL. cisal@cisal.it

Expo. part for concealed S.L. shower valve DUO SINCRONIA_I30G7300

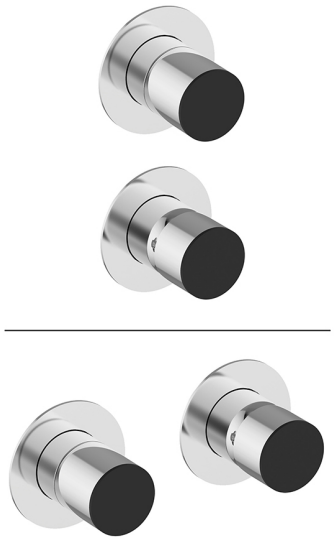

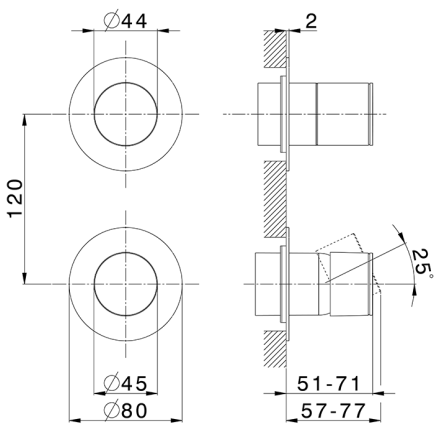

MODEL **I30G7300**

Expo.part for concealed S.L.shower valve DUO,3-Way rotating diverter,without concealed part,for item ZA0G73V0 - Vertical installation,for item ZA0G73L0 - Horizontal installation

AVAILABLE FINISHINGS

	**21**	21 Chrome
	**2F**	2F Brushed Nickel
	**2W**	2W Brushed Gold
	**2X**	2X Black Titanium
	**3W**	3W Brushed Black Titanium
	**40**	40 Matt Black
	**48**	48 Tobacco
	**5G**	5G Rose Gold

CHARACTERISTICS

Installation	**Concealed**
Required concealed parts	**ZA0G73L0**
	ZA0G73V0

2026-11-24

© 2021 Cisal. Via Pietro Durio 160 - 28010 - Alzo (NO) - Italia
Mail: cisal@cisal.it, Telefono: (+39) 0322 918111, P.Iva IT02422810032.