Cisal
TEL. (+39) 0322 918111
MAIL. cisal@cisal.it

# Single lever 'large' washbasin mixer PURA SINCRONIA_I1000504




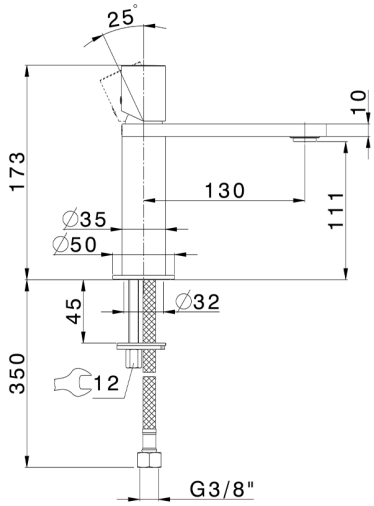


MODEL **I1000504**

Single lever 'large' washbasin mixer PURA,without waste,G.3/8" stainless steel flexible hoses

## AVAILABLE FINISHINGS

| | |
|---|---|
| **21** | 21 Chrome |
| **2F** | 2F Brushed Nickel |
| **2W** | 2W Brushed Gold |
| **2X** | 2X Black Titanium |
| **3W** | 3W Brushed Black Titanium |
| **40** | 40 Matt Black |
| **48** | 48 Tobacco |
| **5G** | 5G Rose Gold |

## CHARACTERISTICS

Cartridge Spare Parts **ZZ96550000**

**25 mm Cartridge**

2026-11-24

© 2021 Cisal. Via Pietro Durio 160 - 28010 - Alzo (NO) - Italia
Mail: cisal@cisal.it, Telefono: (+39) 0322 918111, P.Iva IT02422810032.