Cisal
TEL. (+39) 0322 918111
MAIL. cisal@cisal.it

Thermostatic bath-shower mixer with sliding bar VITA_VIS21010

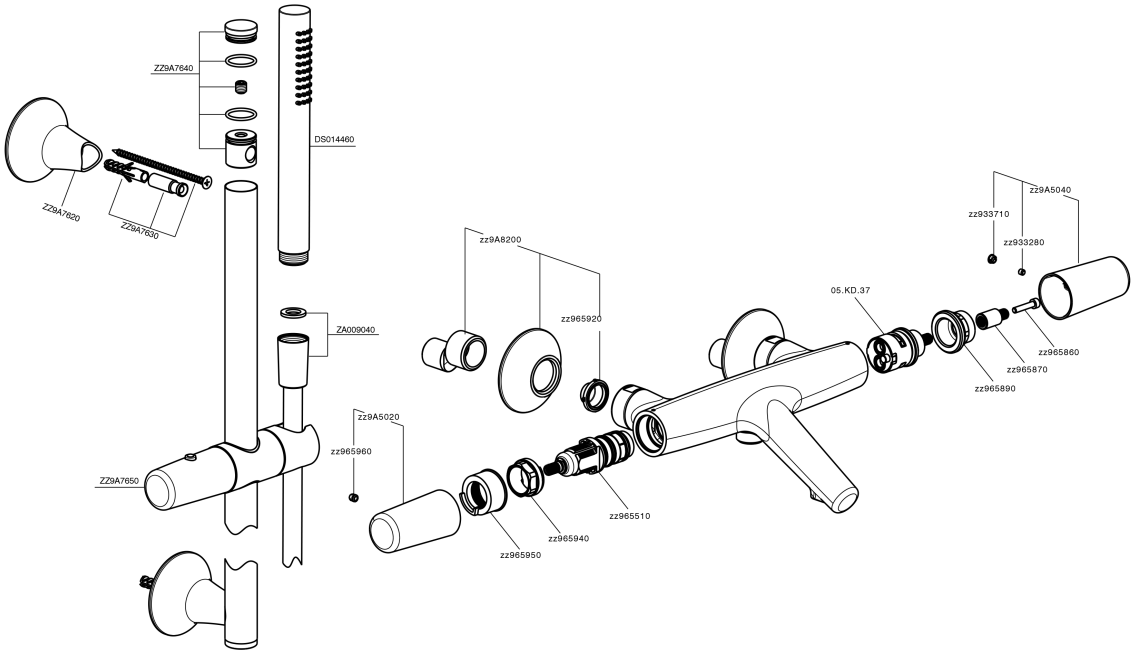

VIS21010

https://en.cisal.it/thermostatic-bath-shower-mixer-with-sliding-bar-vita-vis21010

2026-04-10

© 2021 Cisal. Via Pietro Durio 160 - 28010 - Alzo (NO) - Italia
Mail: cisal@cisal.it, Telefono: (+39) 0322 918111, P.Iva IT02422810032.