Cisal
TEL. (+39) 0322 918111
MAIL. cisal@cisal.it

Shower arm with Arcana showerhead ARCANA COMPONENTS_DS013400

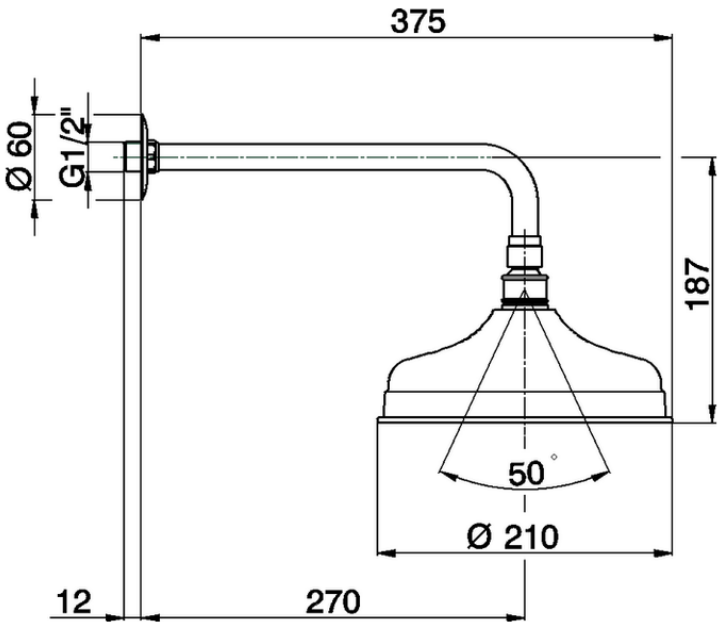

DS013400 https://en.cisal.it/shower-arm-with-arcana-showerhead-arcana-components-ds013400

2026-09-15

© 2021 Cisal. Via Pietro Durio 160 - 28010 - Alzo (NO) - Italia
Mail: cisal@cisal.it, Telefono: (+39) 0322 918111, P.Iva IT02422810032.