Cisal
TEL. (+39) 0322 918111
MAIL. cisal@cisal.it

2-functions Thermostatic shower set ROCK&ROLL_RKC8401D

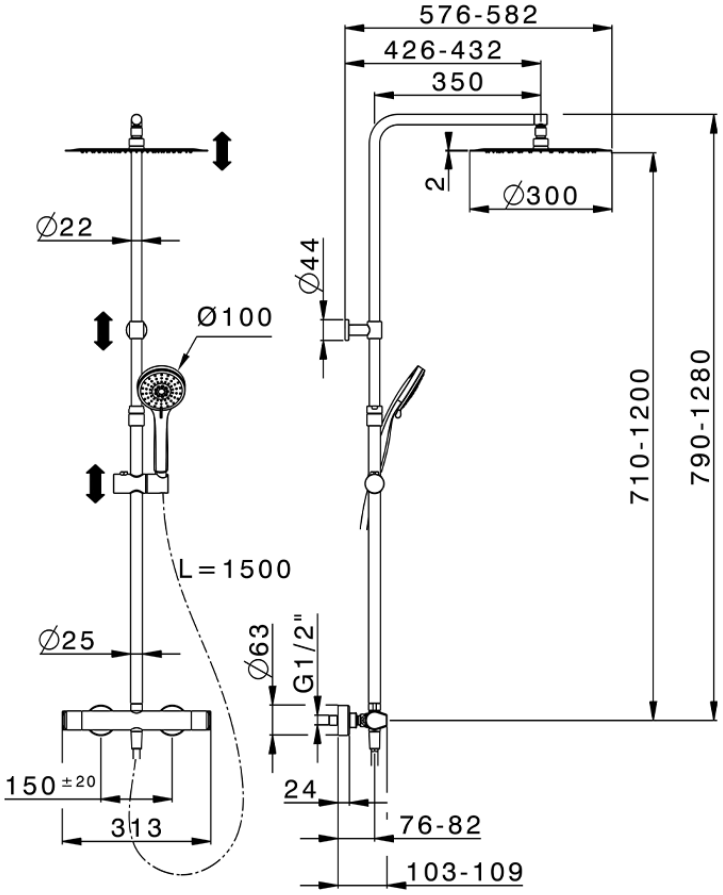

RKC8401D

https://en.cisal.it/2-functions-thermostatic-shower-set-rockroll-rkc8401d

2026-04-28

© 2021 Cisal. Via Pietro Durio 160 - 28010 - Alzo (NO) - Italia
Mail: cisal@cisal.it, Telefono: (+39) 0322 918111, P.Iva IT02422810032.