Cisal
TEL. (+39) 0322 918111
MAIL. cisal@cisal.it

Exposed part for con.thermo.shower valve, 2-outlet SMOOTH X32_X3018100

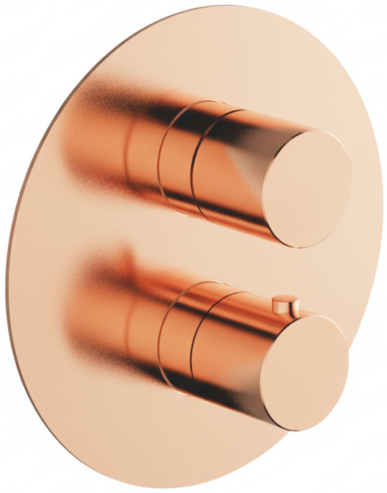

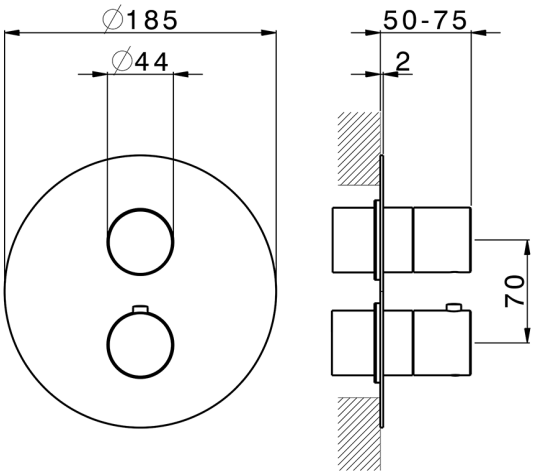

MODEL **X3018100**

Exposed part for con.thermo.shower valve, 2-outlet,with 2 outlet deviastop,without concealed part,for item ZA018101,with smooth handles - Inox AISI 316L

AVAILABLE FINISHINGS

D1 D1 Brushed Inox

5H 5H Dark Brass Brushed

5L 5L Brushed Black Titanium

5N 5N Brushed Rose Gold

CHARACTERISTICS

Installation	**Concealed**
Required concealed parts	**ZA018101**

Thermostatic

The Cisal thermostatic is your personal water manager, helping you to handle, control and save water and energy.

© 2021 Cisal. Via Pietro Durio 160 - 28010 - Alzo (NO) - Italia
Mail: cisal@cisal.it, Telefono: (+39) 0322 918111, P.Iva IT02422810032.

Cisal
TEL. (+39) 0322 918111
MAIL. cisal@cisal.it

Exposed part for con.thermo.shower valve, 2-outlet SMOOTH X32_X3018100

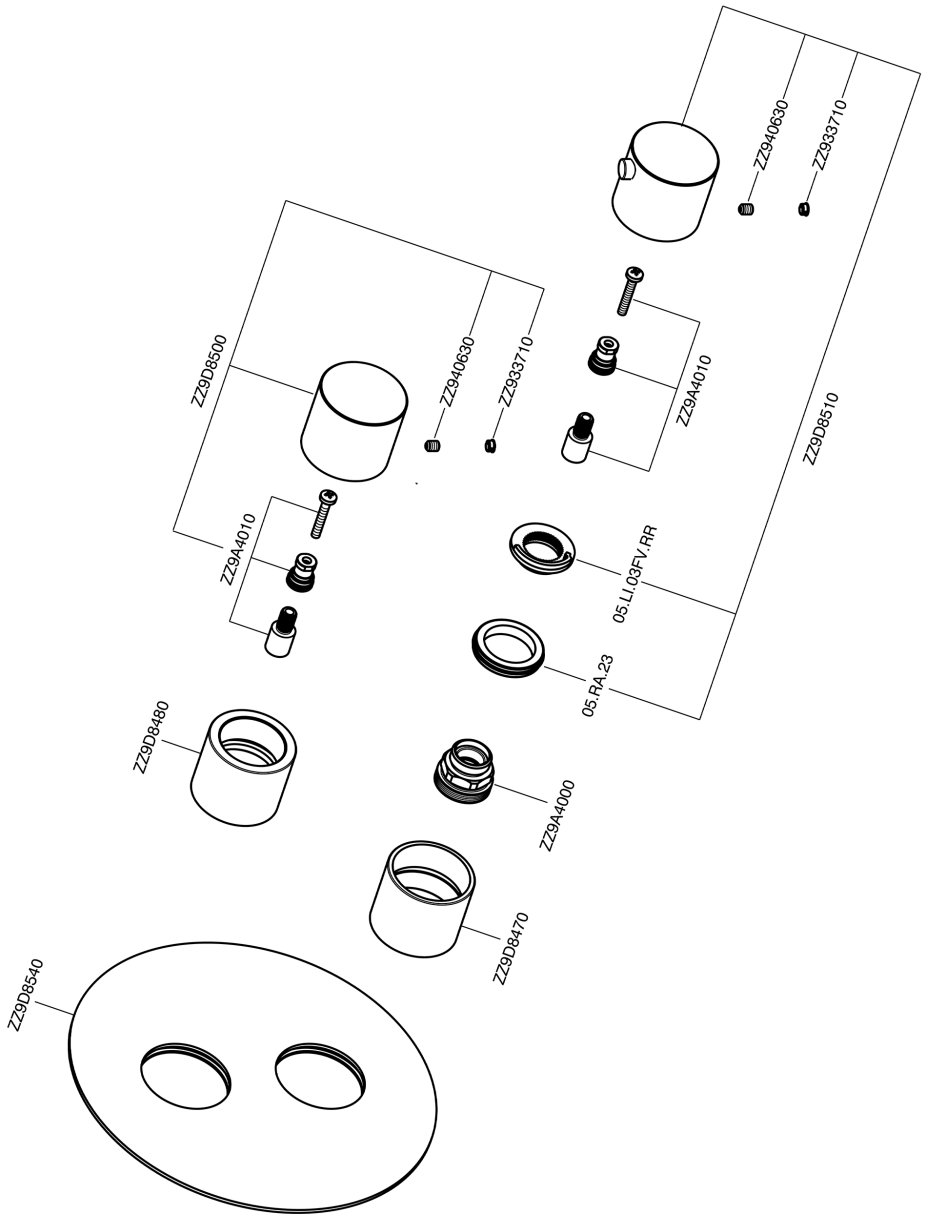

X3018100 https://en.cisal.it/exposed-part-for-con-thermo-shower-valve-2-outlet-smooth-x32-x3018100

© 2021 Cisal. Via Pietro Durio 160 - 28010 - Alzo (NO) - Italia
Mail: cisal@cisal.it, Telefono: (+39) 0322 918111, P.Iva IT02422810032.

Cisal
TEL. (+39) 0322 918111
MAIL. cisal@cisal.it

Concealed thermostatic shower valve, 2-outlets CONCEALED_ZA018101

MODEL **ZA018101**

Concealed thermostatic shower valve, 2-outlets,with 1/2" 2 outlet deviastop cartridge,without trim kit

AVAILABLE FINISHINGS

04 04 Without finishing

CHARACTERISTICS

Concealed	**1**
Cartridge Spare Parts	**24.04A.PP**

8x20 Plus P Thermostatic Valve

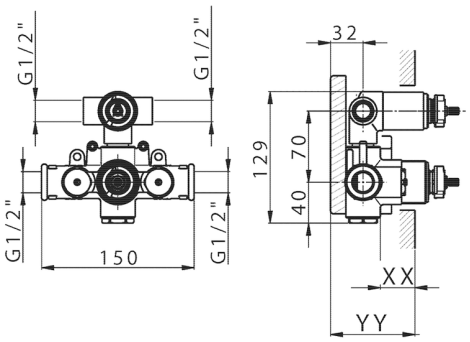

Piastra/Plate/Plaque/Platte/Placa
2-3mm: XX 25-40 YY 76-91
10 mm: XX 16-31 YY 65-80

DeviaStop

The Cisal Devia Stop technology allows to adjust the water flow and to direct it to the selected output point (overhead soaker, hand shower, etc).

Thermostatic

The Cisal thermostatic is your personal water manager, helping you to handle, control and save water and energy.

2026-02-03

© 2021 Cisal. Via Pietro Durio 160 - 28010 - Alzo (NO) - Italia
Mail: cisal@cisal.it, Telefono: (+39) 0322 918111, P.Iva IT02422810032.