Cisal
TEL. (+39) 0322 918111
MAIL. cisal@cisal.it

Single lever tall washbasin mixer NUANCE X32_X2003544

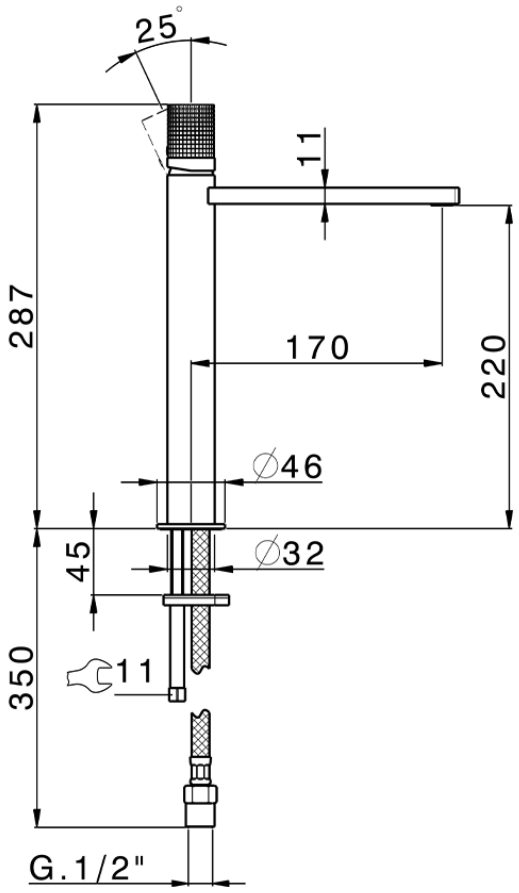

X2003544

https://en.cisal.it/single-lever-tall-washbasin-mixer-nuance-x32-x2003544

2026-06-09

© 2021 Cisal. Via Pietro Durio 160 - 28010 - Alzo (NO) - Italia
Mail: cisal@cisal.it, Telefono: (+39) 0322 918111, P.Iva IT02422810032.