Cisal
TEL. (+39) 0322 918111
MAIL. cisal@cisal.it

# Exposed part for con.thermo.shower valve 1-outlet ROADSTER ACCENT_RA007300



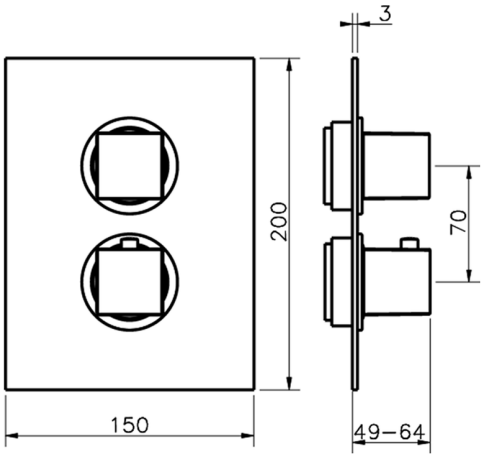


MODEL **RA007300**

Exposed part for con.thermo.shower valve 1-outlet,stop valve,without concealed part,for items ZA007301-ZA007361

## AVAILABLE FINISHINGS

| | | |
|---|---|---|
| | **21** | 21 Chrome |
| | **2B** | 2B Polished Nickel |
| | **2F** | 2F Brushed Nickel |
| | **2Q** | 2Q Black Titanium |
| | **40** | 40 Matt Black |
| | **4Q** | 4Q Matt White |

## CHARACTERISTICS

| | |
|---|---|
| Installation | **Concealed** |
| Required concealed parts | **ZA007301** |

### Thermostatic

The Cisal thermostatic is your personal water manager, helping you to handle, control and save water and energy.

© 2021 Cisal. Via Pietro Durio 160 - 28010 - Alzo (NO) - Italia
Mail: cisal@cisal.it, Telefono: (+39) 0322 918111, P.Iva IT02422810032.

Cisal
TEL. (+39) 0322 918111
MAIL. cisal@cisal.it

# Concealed thermostatic shower valve, 1-outlet CONCEALED_ZA007301



MODEL **ZA007301**

Concealed thermostatic shower valve,
1-outlet,Stopvalve with 1/2" outlet,without trim kit

## AVAILABLE FINISHINGS

**04** 04 Without finishing

## CHARACTERISTICS

| | |
|---|---|
| Concealed | **1** |
| Cartridge Spare Parts | **24.04A.PP** |

**8x20 Plus P Thermostatic Valve**

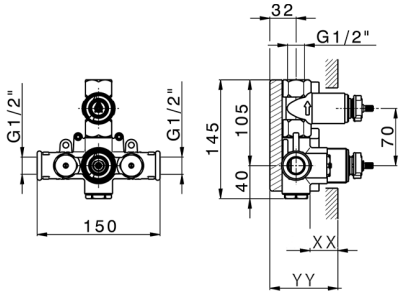


Piastra/Plate/Plaque/Platte/Placa
2-3mm: XX 25-40 YY 76-91
10mm: XX 16-31 YY 65-80

## Thermostatic

The Cisal thermostatic is your personal water manager, helping you to handle, control and save water and energy.

2026-11-23

© 2021 Cisal. Via Pietro Durio 160 - 28010 - Alzo (NO) - Italia
Mail: cisal@cisal.it, Telefono: (+39) 0322 918111, P.Iva IT02422810032.