Cisal
TEL. (+39) 0322 918111
MAIL. cisal@cisal.it

Bidet tap TR_TR001100

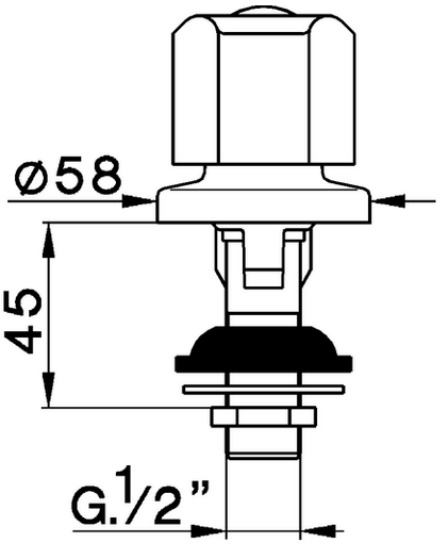

TR001100

https://en.cisal.it/bidet-tap-tr-tr001100

2026-02-03

© 2021 Cisal. Via Pietro Durio 160 - 28010 - Alzo (NO) - Italia
Mail: cisal@cisal.it, Telefono: (+39) 0322 918111, P.Iva IT02422810032.