Cisal
TEL. (+39) 0322 918111
MAIL. cisal@cisal.it

Towel holder BATHROOM ACCESSORIES_SY090101

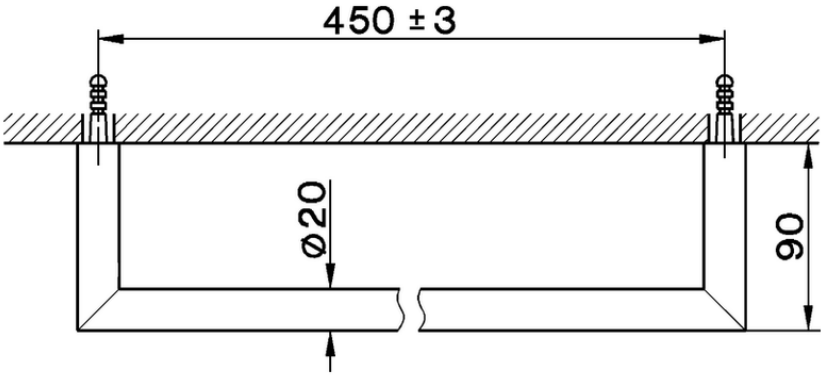

SY090101

https://en.cisal.it/towel-holder-bathroom-accessories-sy090101

2026-09-16

© 2021 Cisal. Via Pietro Durio 160 - 28010 - Alzo (NO) - Italia
Mail: cisal@cisal.it, Telefono: (+39) 0322 918111, P.Iva IT02422810032.