Cisal
TEL. (+39) 0322 918111
MAIL. cisal@cisal.it

Exposed part for con.thermo.shower valve,2-outlets HI-RISE_RI019640

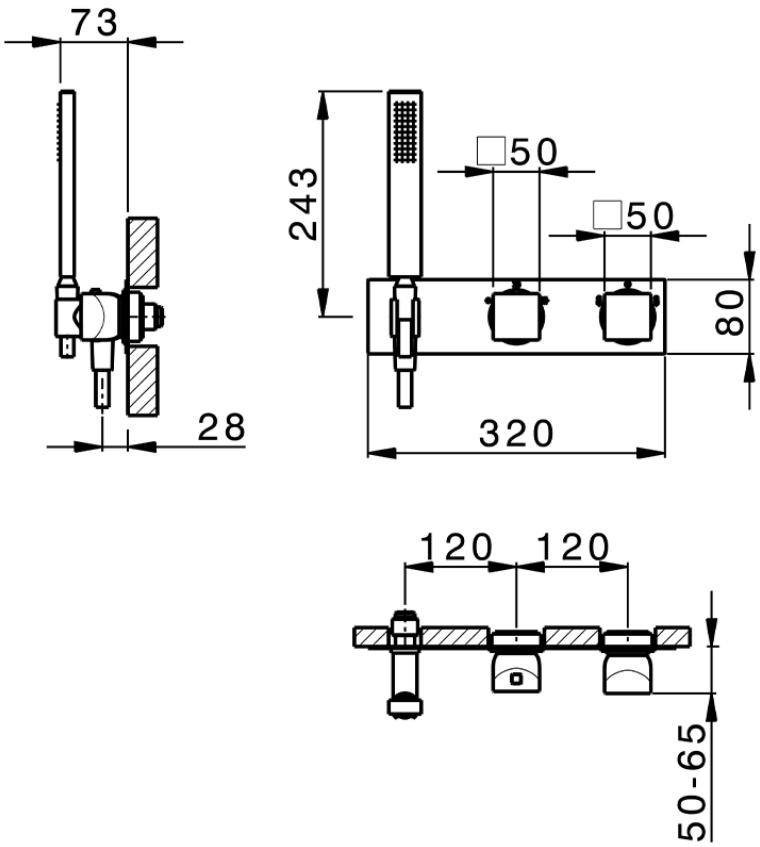

RI019640 https://en.cisal.it/exposed-part-for-con-thermo-shower-valve-2-outlets-hi-rise-ri019640

© 2021 Cisal. Via Pietro Durio 160 - 28010 - Alzo (NO) - Italia
Mail: cisal@cisal.it, Telefono: (+39) 0322 918111, P.Iva IT02422810032.

Cisal
TEL. (+39) 0322 918111
MAIL. cisal@cisal.it

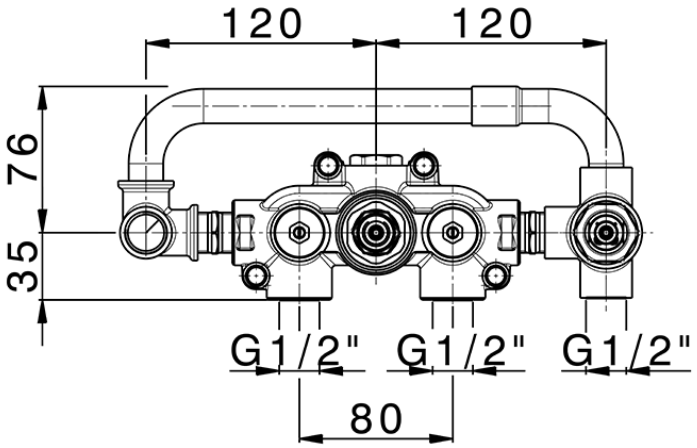

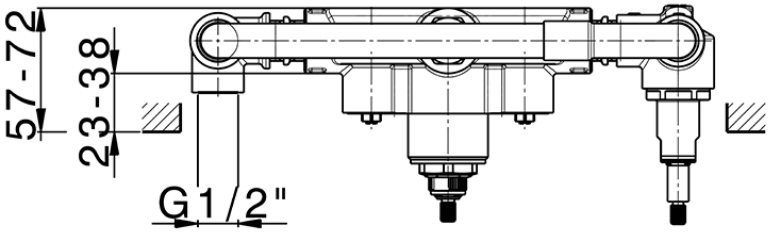

ZA019340 https://en.cisal.it/concealed-thermostatic-shower-mixer-2-outlets-concealed-za019340

2026-01-12

© 2021 Cisal. Via Pietro Durio 160 - 28010 - Alzo (NO) - Italia
Mail: cisal@cisal.it, Telefono: (+39) 0322 918111, P.Iva IT02422810032.