Cisal
TEL. (+39) 0322 918111
MAIL. cisal@cisal.it

Single lever tall washbasin mixer TENDER_C2003540

MODEL **C2003540**

Single lever tall washbasin mixer,without automatic pop-up waste,G.3/8" stainless steel flexible hoses

AVAILABLE FINISHINGS

21 21 Chrome

CHARACTERISTICS

Cartridge Spare Parts **ZZ95435000**

35 mm Cartridge

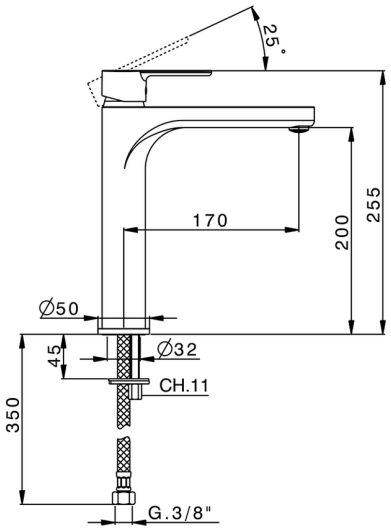

EcoStop

EcoStop feature limits water flow to approximately 50% of maximum output with one point of resistance on setting. Push slightly past the middle stop only when full water output is required. This will save water up to 50%.

2026-05-20

© 2021 Cisal. Via Pietro Durio 160 - 28010 - Alzo (NO) - Italia
Mail: cisal@cisal.it, Telefono: (+39) 0322 918111, P.Iva IT02422810032.