Cisal
TEL. (+39) 0322 918111
MAIL. cisal@cisal.it

Exposed part for concealed washbasin mixer GRACE_GS013512

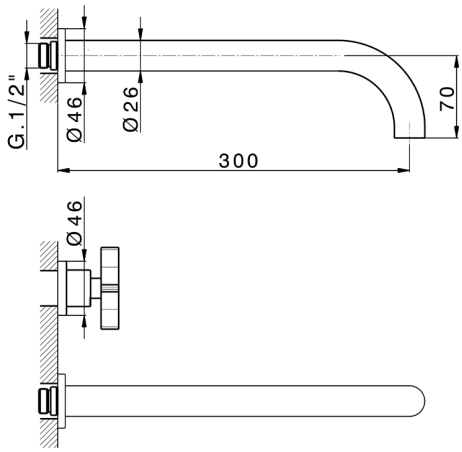

MODEL **GS013512**

Exposed part for concealed washbasin mixer,without concealed part,for item ZA033511

AVAILABLE FINISHINGS

21 21 Chrome

2F 2F Brushed Nickel

2W 2W Brushed Gold

5H 5H Dark Brass Brushed

5L 5L Brushed Black Titanium

6T 6T Chrome/Matt Black

CHARACTERISTICS

Installation	**Concealed**
Required concealed parts	**ZA033511**

© 2021 Cisal. Via Pietro Durio 160 - 28010 - Alzo (NO) - Italia
Mail: cisal@cisal.it, Telefono: (+39) 0322 918111, P.Iva IT02422810032.

Cisal
TEL. (+39) 0322 918111
MAIL. cisal@cisal.it

Exposed part for concealed washbasin mixer GRACE_GS013512

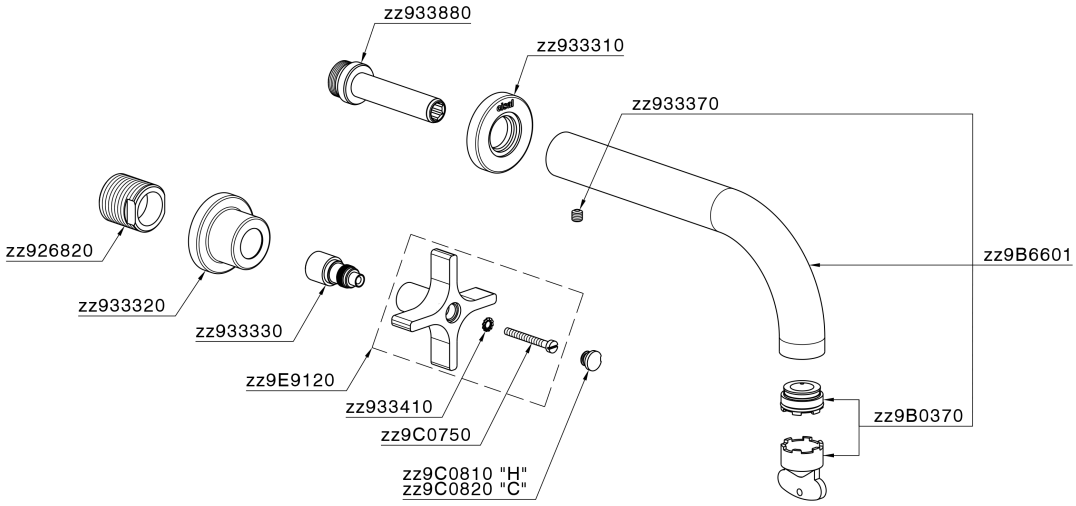

GS013512

https://en.cisal.it/exposed-part-for-concealed-washbasin-mixer-grace-gs013512

Cisal
TEL. (+39) 0322 918111
MAIL. cisal@cisal.it

Concealed washbasin mixer CONCEALED_ZA033511

MODEL **ZA033511**

Concealed washbasin mixer,right headvalve - left headvalve

AVAILABLE FINISHINGS

04 04 Without finishing

CHARACTERISTICS

Concealed **1**

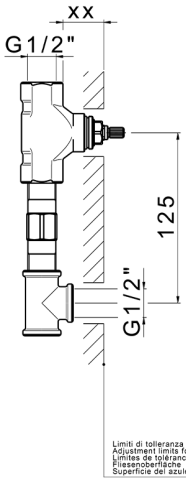

Serie's code	Size XX
CX 1351	20-35
CF 1351	20-35
CX 0331	20-35
CF 0331	20-35
CX 0200	20-35
CF 0200	20-35
BA 1351	20-35
GS 1351	20-35
GL 1351	20-35
MN 1351	20-35
LN 1351	20-35
LV 1351	33-48
LY 1351	33-48
CU 1351	33-48
SM 1351	30-45
AA 1351	10-30
AC 1351	10-30
AR 1351	15-25
PZ 1351	10-30
RG 1351	10-30
TS 1351	10-30
VT 1351	10-30
CS 1351	10-30
WA 1351	45-68
X1 1351	33-45
X2 1351	33-45
X3 1351	33-45
X4 1351	33-45
X5 1351	33-45
RI 1351	20-35
RM 1351	20-35

2026-05-17

© 2021 Cisal. Via Pietro Durio 160 - 28010 - Alzo (NO) - Italia
Mail: cisal@cisal.it, Telefono: (+39) 0322 918111, P.Iva IT02422810032.