Cisal
TEL. (+39) 0322 918111
MAIL. cisal@cisal.it

Single lever washbasin mixer SLIM_SM000710



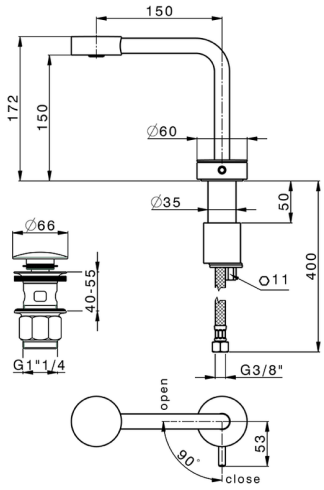

MODEL **SM000710**

Single lever washbasin mixer,with 1"1/4 Click Clack waste,G.3/8" stainless steel flexible hoses

AVAILABLE FINISHINGS

40 40 Matt Black

4Q 4Q Matt White

6T 6T Chrome/Matt Black

7D 7D Polished Nickel/Matt Black

CHARACTERISTICS

Cartridge Spare Parts **ZZ99856004**

27 mm Progressive single-lever cartridge

© 2021 Cisal. Via Pietro Durio 160 - 28010 - Alzo (NO) - Italia
Mail: cisal@cisal.it, Telefono: (+39) 0322 918111, P.Iva IT02422810032.

Cisal
TEL. (+39) 0322 918111
MAIL. cisal@cisal.it

Single lever washbasin mixer SLIM_SM000710

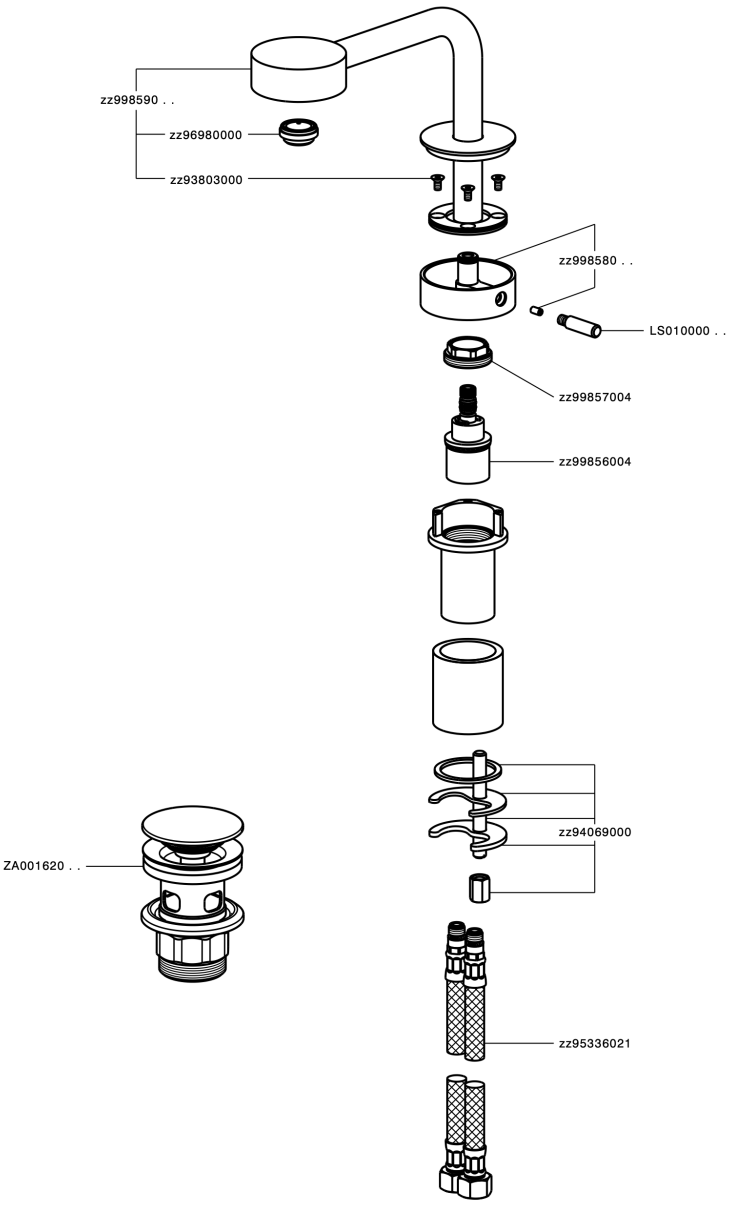

SM000710

https://en.cisal.it/single-lever-washbasin-mixer-slim-sm000710

2026-11-25

© 2021 Cisal. Via Pietro Durio 160 - 28010 - Alzo (NO) - Italia
Mail: cisal@cisal.it, Telefono: (+39) 0322 918111, P.Iva IT02422810032.