Cisal
TEL. (+39) 0322 918111
MAIL. cisal@cisal.it

Single lever 'medium' washbasin mixer SMOOTH X32_X4001504

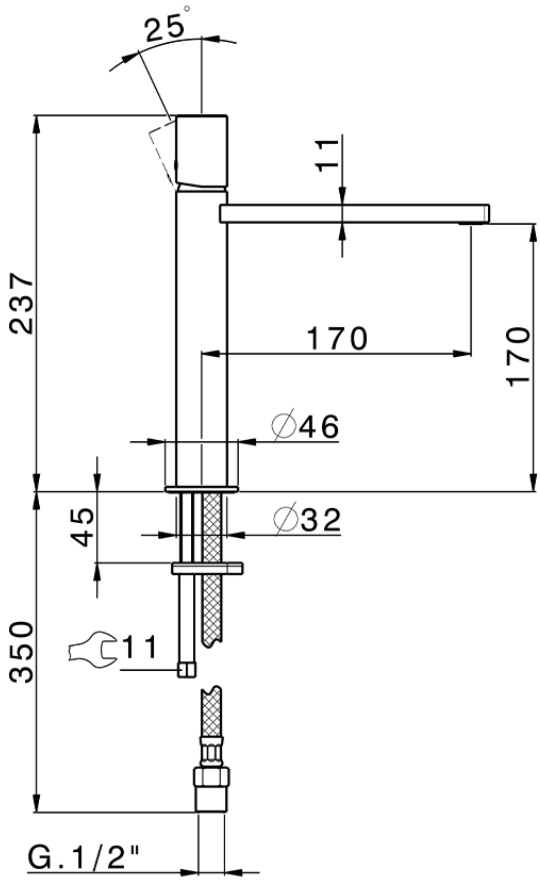

X4001504

https://en.cisal.it/single-lever-medium-washbasin-mixer-smooth-x32-x4001504

2026-06-04

© 2021 Cisal. Via Pietro Durio 160 - 28010 - Alzo (NO) - Italia
Mail: cisal@cisal.it, Telefono: (+39) 0322 918111, P.Iva IT02422810032.