Cisal
TEL. (+39) 0322 918111
MAIL. cisal@cisal.it

Exposed part for 2-outlet thermostatic mixer LINEAVIVA_LV0G2200C





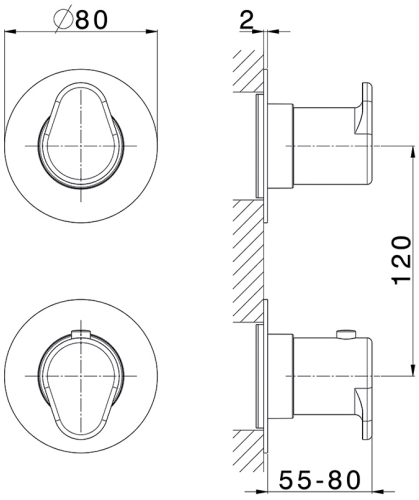

MODEL **LV0G2200C**

Exposed part for 2-outlet thermostatic mixer,with 2-outlet diverter,without concealed part,for item Easy-Box ZA0G22V0

AVAILABLE FINISHINGS

- **21** 21 Chrome
- **2F** 2F Brushed Nickel
- **40** 40 Matt Black
- **4Q** 4Q Matt White
- **2W** 2W Brushed Gold
- **26** 26 Old Copper
- **3W** 3W Brushed Black Titanium
- **43** 43 Salvia
- **44** 44 Graphite
- **45** 45 Argilla
- **46** 46 Metal Bronze
- **47** 47 Cemento

© 2021 Cisal. Via Pietro Durio 160 - 28010 - Alzo (NO) - Italia
Mail: cisal@cisal.it, Telefono: (+39) 0322 918111, P.Iva IT02422810032.

CHARACTERISTICS

Installation	**Concealed**
Required concealed parts	**ZA0G22V0**

2026-11-23