Cisal
TEL. (+39) 0322 918111
MAIL. cisal@cisal.it

Washbasin mixer GRACE_MN000520

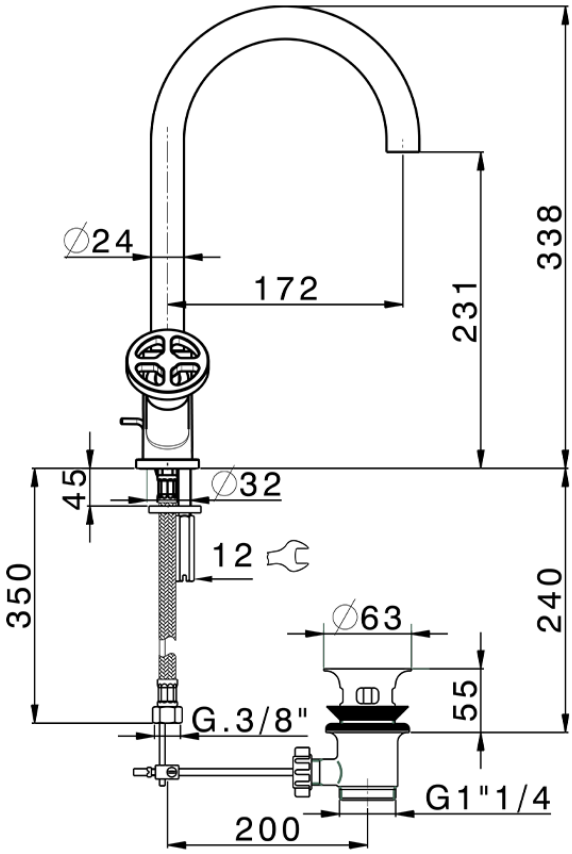

MN000520

https://en.cisal.it/washbasin-mixer-grace-mn000520

2026-04-30

© 2021 Cisal. Via Pietro Durio 160 - 28010 - Alzo (NO) - Italia
Mail: cisal@cisal.it, Telefono: (+39) 0322 918111, P.Iva IT02422810032.