Cisal
TEL. (+39) 0322 918111
MAIL. cisal@cisal.it

Floor pillar legs COMPONENTS_ZA003830

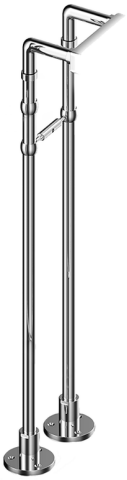

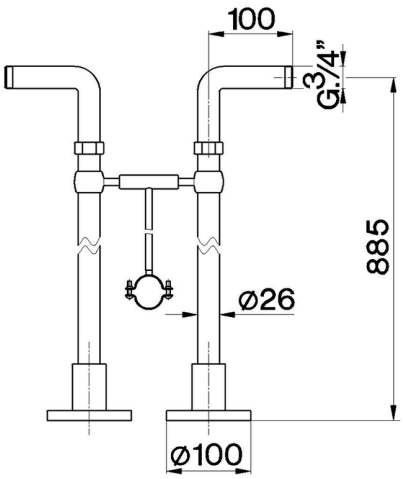

MODEL **ZA003830**

Floor pillar legs

AVAILABLE FINISHINGS

21 21 Chrome

24 24 Gold

26 26 Old Copper

27 27 Old Bronze

2A 2A Satin Brushed Nickel

CHARACTERISTICS

© 2021 Cisal. Via Pietro Durio 160 - 28010 - Alzo (NO) - Italia
Mail: cisal@cisal.it, Telefono: (+39) 0322 918111, P.Iva IT02422810032.

Floor pillar legs COMPONENTS_ZA003830

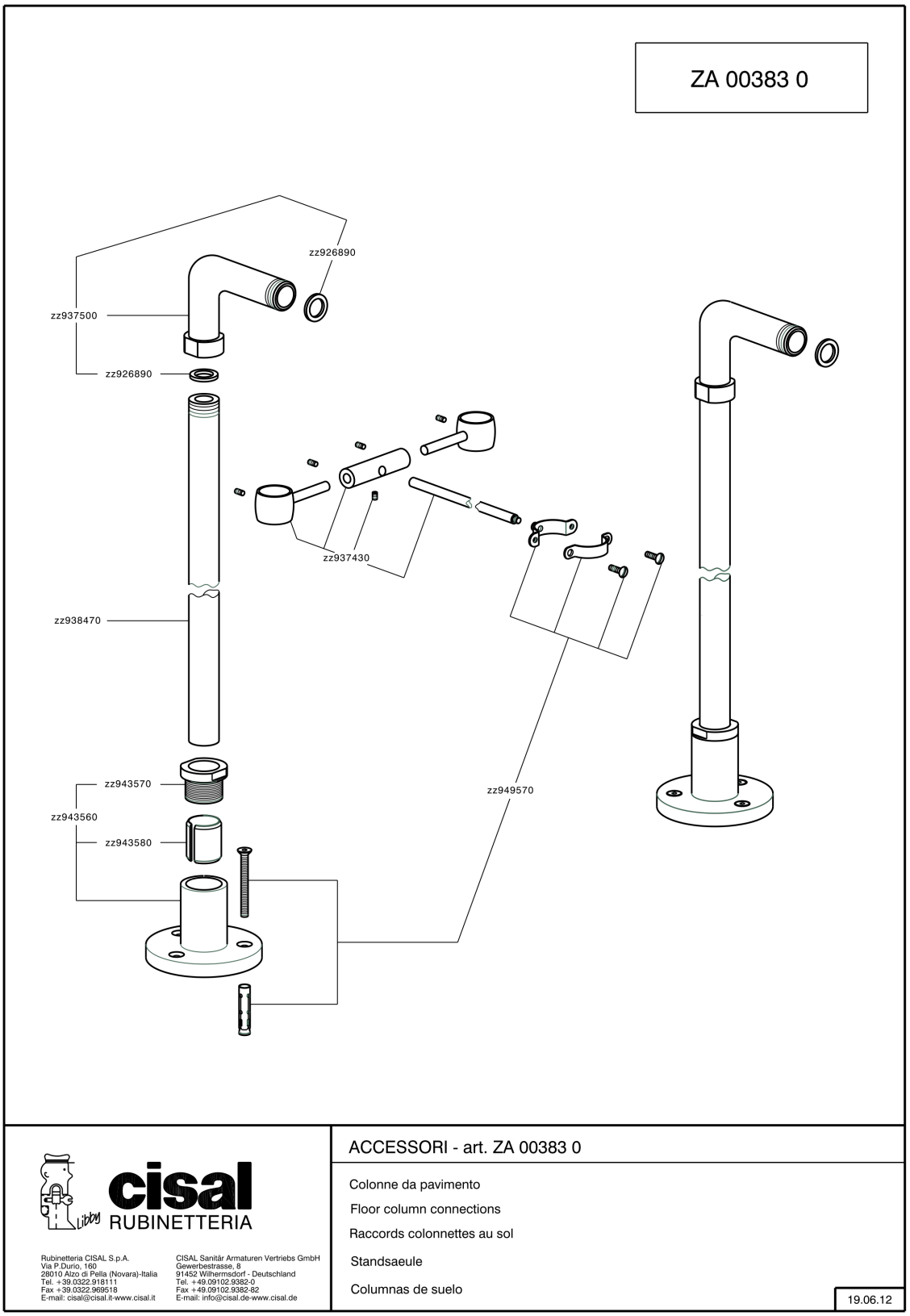

ZA003830

https://en.cisal.it/floor-pillar-legs-components-za003830

2026-11-23

© 2021 Cisal. Via Pietro Durio 160 - 28010 - Alzo (NO) - Italia
Mail: cisal@cisal.it, Telefono: (+39) 0322 918111, P.Iva IT02422810032.