Cisal
TEL. (+39) 0322 918111
MAIL. cisal@cisal.it

3-holes basin mixer HI-RISE_RI001060

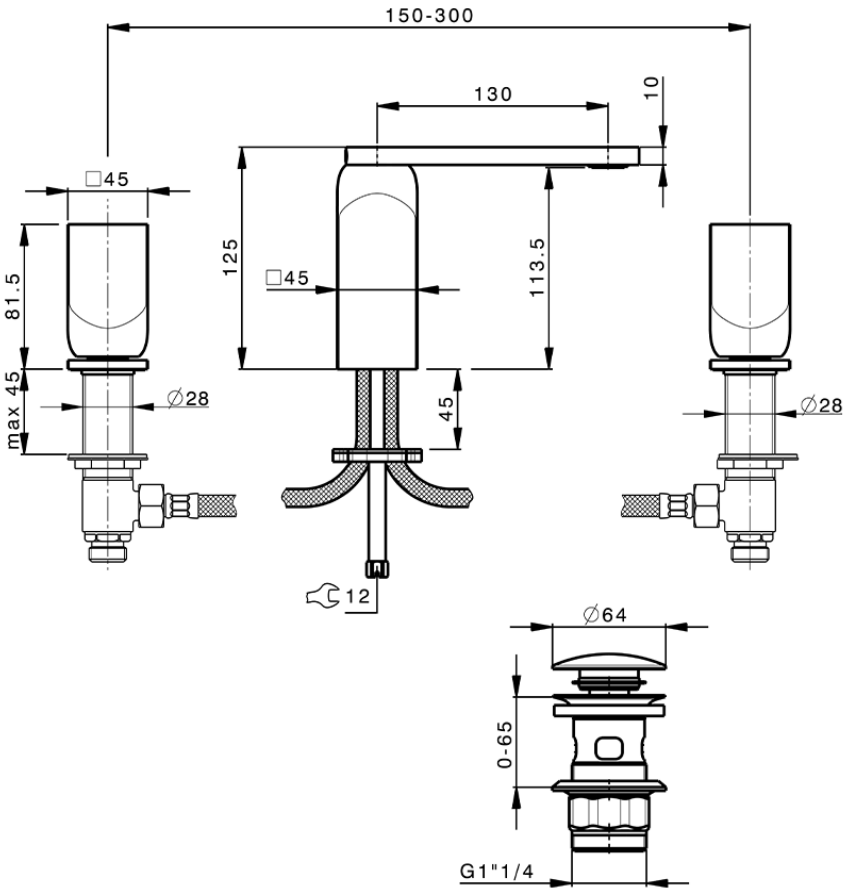

RI001060

https://en.cisal.it/3-holes-basin-mixer-hi-rise-ri001060

2026-04-27

© 2021 Cisal. Via Pietro Durio 160 - 28010 - Alzo (NO) - Italia
Mail: cisal@cisal.it, Telefono: (+39) 0322 918111, P.Iva IT02422810032.