Cisal
TEL. (+39) 0322 918111
MAIL. cisal@cisal.it

Exposed part for concealed washbasin mixer SMOOTH X32_X3013511

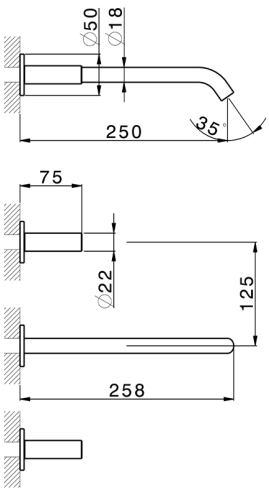

MODEL **X3013511**

Exposed part for concealed washbasin mixer,without concealed part,for item ZA033510,with smooth handles,Inox AISI 316L

AVAILABLE FINISHINGS

D1 D1 Brushed Inox

5H 5H Dark Brass Brushed

5L 5L Brushed Black Titanium

5N 5N Brushed Rose Gold

CHARACTERISTICS

Installation	**Concealed**
Required concealed parts	**ZA033510**

© 2021 Cisal. Via Pietro Durio 160 - 28010 - Alzo (NO) - Italia
Mail: cisal@cisal.it, Telefono: (+39) 0322 918111, P.Iva IT02422810032.

Cisal
TEL. (+39) 0322 918111
MAIL. cisal@cisal.it

Exposed part for concealed washbasin mixer SMOOTH X32_X3013511

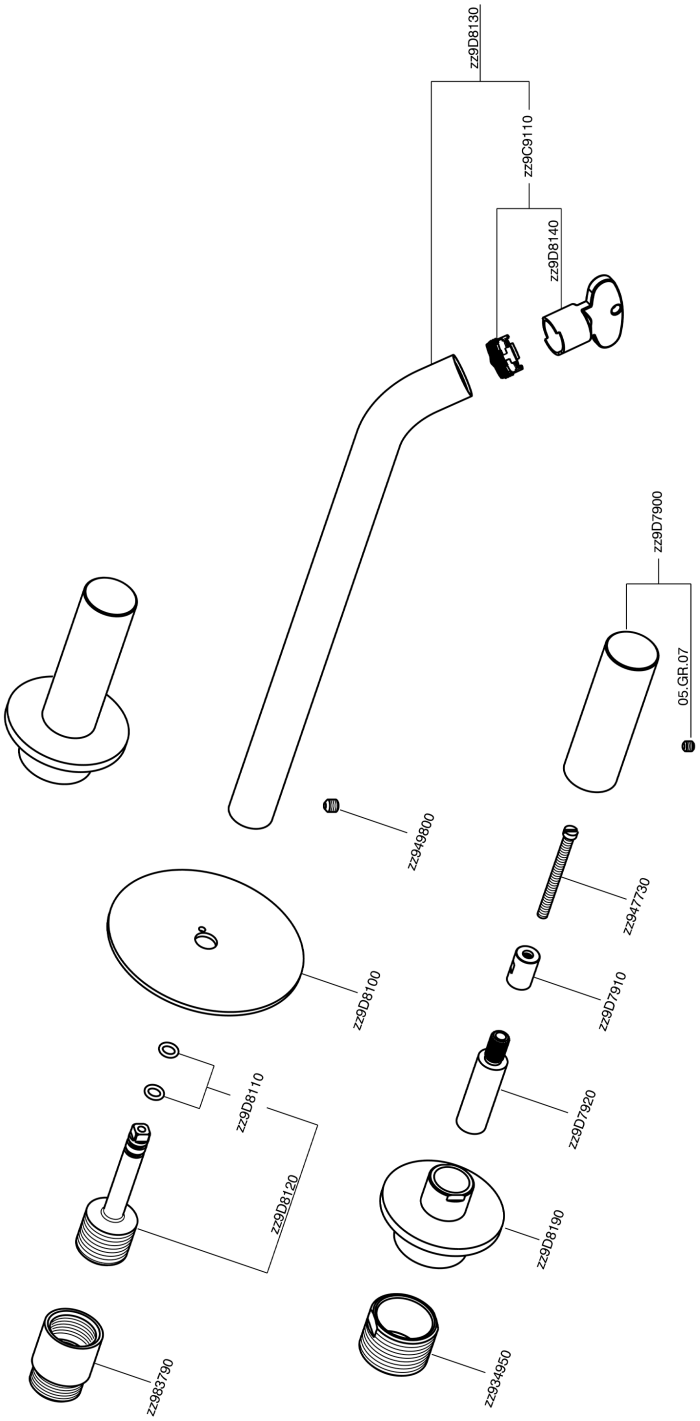

X3013511 https://en.cisal.it/exposed-part-for-concealed-washbasin-mixer-smooth-x32-x3013511

© 2021 Cisal. Via Pietro Durio 160 - 28010 - Alzo (NO) - Italia
Mail: cisal@cisal.it, Telefono: (+39) 0322 918111, P.Iva IT02422810032.

Cisal
TEL. (+39) 0322 918111
MAIL. cisal@cisal.it

Concealed washbasin mixer CONCEALED_ZA033510

MODEL **ZA033510**

Concealed washbasin mixer,with two right headvalves

AVAILABLE FINISHINGS

04 04 Without finishing

CHARACTERISTICS

Concealed **1**

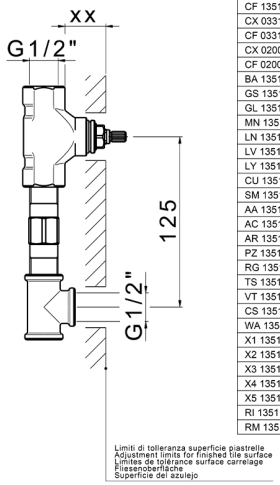

Serie's code	Size XX
CX 1351	20-35
CF 1351	20-35
CX 0331	20-35
CF 0331	20-35
CX 0200	20-35
CF 0200	20-35
BA 1351	20-35
GS 1351	20-35
GL 1351	20-35
MN 1351	20-35
LN 1351	20-35
LV 1351	33-48
LY 1351	33-48
CU 1351	33-48
SM 1351	30-45
AA 1351	10-30
AC 1351	10-30
AR 1351	15-25
PZ 1351	10-30
RG 1351	10-30
TS 1351	10-30
VT 1351	10-30
CS 1351	10-30
WA 1351	45-68
X1 1351	33-45
X2 1351	33-45
X3 1351	33-45
X4 1351	33-45
X5 1351	33-45
RI 1351	20-35
RM 1351	20-35

2026-03-17

© 2021 Cisal. Via Pietro Durio 160 - 28010 - Alzo (NO) - Italia
Mail: cisal@cisal.it, Telefono: (+39) 0322 918111, P.Iva IT02422810032.