Cisal
TEL. (+39) 0322 918111
MAIL. cisal@cisal.it

3 hole washbasin mixer HI-RISE_RM001020



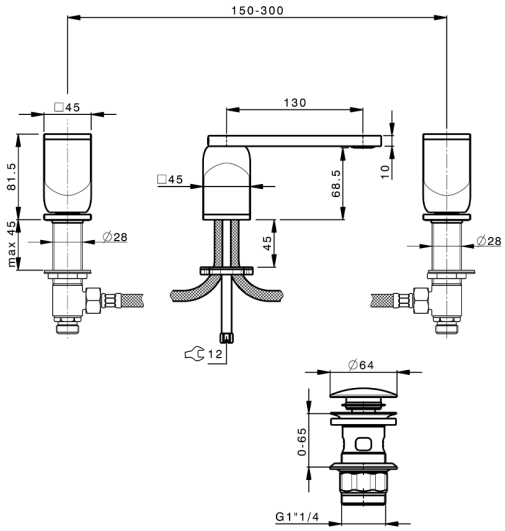

MODEL **RM001020**

3 hole washbasin mixer,with 1"1/4 Click Clack waste,body and handles in marble

AVAILABLE FINISHINGS

	**7S**	7S White Carrara Marble/Brushed Gold
	**7X**	7X White Carrara Marble/Brushed Nickel
	**7Y**	7Y Carrara Marble/Chrome
	**8A**	8A Marquinia Marble/Brushed Gold
	**8B**	8B Marquinia Marble/Gold
	**8D**	8D Black Marquinia Marble/Chrome

CHARACTERISTICS

2026-11-26

© 2021 Cisal. Via Pietro Durio 160 - 28010 - Alzo (NO) - Italia
Mail: cisal@cisal.it, Telefono: (+39) 0322 918111, P.Iva IT02422810032.