Cisal
TEL. (+39) 0322 918111
MAIL. cisal@cisal.it

# Sink mixer KITCHEN_AC000530

## cisal

## AC 00052 (AC 00053)

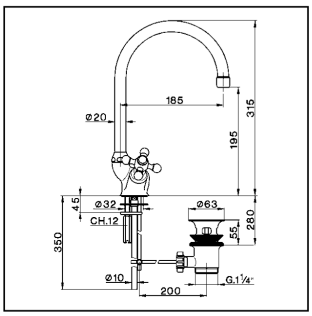


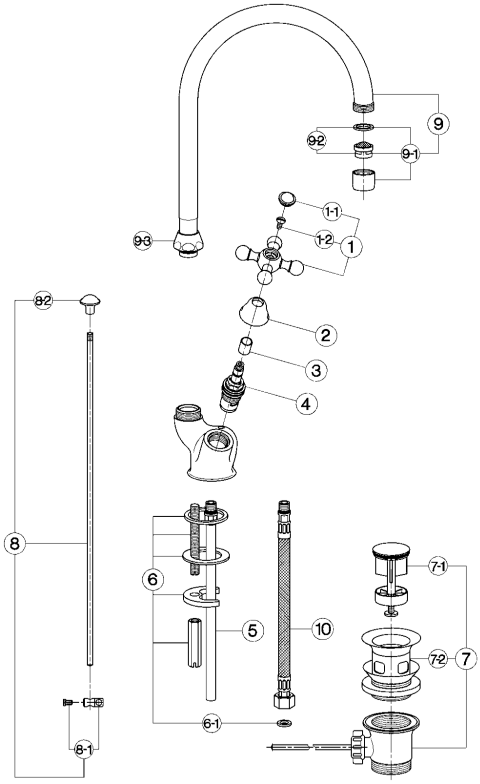


- **Monoforo lavabo**
- ***Single hole basin mixer***
- **Einloch-Waschtischbatterie**
- ***Mélangeur monotrou lavabo***

| bar | PORTATA BOCCA DI EROGAZIONE * *SPOUT FLOW RATE* DURCHFLUSS WANNENEINLAUF *DEBIT BEC DEVERSEUR* l/min. |
|---|---|
| 0.5 | 9.5 |
| 1 | 13 |
| 2 | 18.5 |
| 3 | 22.5 |
| 4 | 26 |
| 5 | 29 |

* con resistenza silenziosa della classe di portata B (25.2 l/min. a 3 bar)
*with hydraulic resistance of flow rate class B (25.2 l/min. at 3 bar)*
mit geräuscharmen Widerstand der Durchflussklasse B (25.2 l/min. bei 3 bar)
*avec aérateur classe B (25.2 l/min. à 3 bar)*

| NR. | DESCRIZIONE *DESCRIPTION* BESCHREIBUNG *DÉSCRIPTION* | N. CODICE *CODE NO.* WERKSNR. *NR. CODE* |
|---|---|---|
| 1 | Maniglia "AR" con vite e placchetta<br>*Handle with screw and plate "AR"*<br>Griff "AR" mit Schraube und Abdeckkappe<br>*Croisillon avec vis et plaquette "AR"* | ZZ 90307 0 |
| 1-1 | Placchetta a vite maniglia "AR"<br>*Cap for handle "AR"*<br>Abdeckkappe "AR" Griff<br>*Plaquette cache - vis crois. "AR"* | ZZ 92617 0 |
| 1-2 | Vite M.4,5x10 tb. tc. zigrinata<br>*Screw M.4,5x10*<br>Schraube M.4,5x10<br>*Vis M.4,5x10* | ZZ 92609 0 |
| 2 | Cappuccio coprivitone Ø32 H.21 "AC"<br>*Escutcheon Ø32 H.21 "AC" headvalve*<br>Abdeckkappe Ø32 H.21 "AC"<br>*Rosace couvre-tête Ø32 H.21 "AC"* | ZZ 92652 0 |
| 3 | Tubetto copriasta "AR" H.15,5<br>*Sliding cover tube "AR" H.15,5*<br>Abdeckkappe Oberteil "AR" H.15,5<br>*Tube couvre-tête "AR" H.15,5* | ZZ 92619 0 |
| 4 | Vitone ceramico DX per monofori e gruppi "AC"<br>*Ceramic headvalve 1/2" right "AC"-short*<br>Keramikoberteil 1/2"-rechts-"AC"-kurz<br>*Tête céramique 1/2" droite "AC" - courte* | ZZ 92858 0 |
| 5 | Tubetto monoforo "SU" con O.R.<br>*Tube with O.R. "SU"*<br>Anschlussrohr mit O.R. "SU"<br>*Tube "SU" avec O.R.* | ZZ 92838 0 |
| 6 | Set installazione monocomando monoforo<br>*Installation set single hole*<br>Befestigungsset<br>*Set installation* | ZZ 92851 0 |
| 6-1 | Guarnizione fibra 3/8"<br>*Gasket rubber 3/8"*<br>Fiberdichtung 3/8"<br>*Joint en fibre 3/8"* | ZZ 92696 0 |

| NR. | DESCRIZIONE *DESCRIPTION* BESCHREIBUNG *DÉSCRIPTION* | N. CODICE *CODE NO.* WERKSNR. *NR. CODE* |
|---|---|---|
| 7 | Scarico automatico 1" 1/4 sabbiato<br>*Pop-up waste 1"1/4*<br>Ablaufgarnitur 1" 1/4<br>*Vidage automat. 1"1/4* | ZZ 92754 0 |
| 7-1 | Tappo completo scarico automatico 1" 1/4<br>*Plug for pop-up waste 1" 1/4*<br>Stopfen f/Ablaufg. kpl 1" 1/4<br>*Bonde - vidage 1"1/4* | ZZ 92925 0 |
| 7-2 | Piletta per scarico automatico 1" 1/4<br>*Waste for bath drain 1" 1/4*<br>Ablauf f/Ablaufgarnitur 1" 1/4<br>*Crépine pour vidage 1" 1/4* | ZZ 92924 0 |
| 8 | Astina scarico completa Ø6<br>*Rod Ø6*<br>Zugstange Ø6<br>*Tige Ø6* | ZZ 92760 0 |
| 8-1 | Morsetto astina scarico automatico Ø6,2<br>*Connection for pop-up rod Ø6,2*<br>Gelenkstueck f/Zugstange Ø6,2<br>*Jonction x tige vidage Ø6,2* | ZZ 92622 0 |
| 8-2 | Pomolo per scarico automatico "AR"<br>*Knob for pop-up rod "AR"*<br>Zugknopf f/Ablaufgarn."AR"<br>*Pommeau - tige "AR"* | ZZ 92624 0 |
| 9 | Canna alta Ø20 interasse 185<br>*Swinging spout 185 Ø20*<br>Auslauf-Rohr-schwenkbar-185 Ø20<br>*Bec orientable 185 Ø20* | ZZ 90124 0 |
| 9-1 | Aeratore M.22x1 IB<br>*Mousseur M.22x1 IB*<br>Perlator M.22x1 IB<br>*Mousseur M.22x1 IB* | ZZ 92841 0 |
| 9-2 | Cartuccia per aeratore M. 22x1<br>*Mousseur cartridge M.22x1*<br>Kart. f/Perlator M.22x1<br>*Cartouche x mousseur M.22x1* | ZZ 92703 0 |

| NR. | DESCRIZIONE *DESCRIPTION* BESCHREIBUNG *DÉSCRIPTION* | N. CODICE *CODE NO.* WERKSNR. *NR. CODE* |
|---|---|---|
| 9-3 | Calotta 3/4" es.29 Ø19,5<br>*Nut 3/4" Ø19,5*<br>Mutter 3/4" Ø19,5<br>*Ecrou 3/4" Ø19,5* | ZZ 92615 0 |
| 10 | Flessibile M.11x1 3/8"F L.365<br>*Flex M.11x1 3/8" L.365*<br>Anschlussschlauch M.11x1 3/8" L.365<br>*Flex M.11x1 3/8" L.365* | ZZ 92842 0 |

AC.7



© 2021 Cisal. Via Pietro Durio 160 - 28010 - Alzo (NO) - Italia
Mail: cisal@cisal.it, Telefono: (+39) 0322 918111, P.Iva IT02422810032.