Cisal
TEL. (+39) 0322 918111
MAIL. cisal@cisal.it

Washbasin mixer GRACE_GL000510



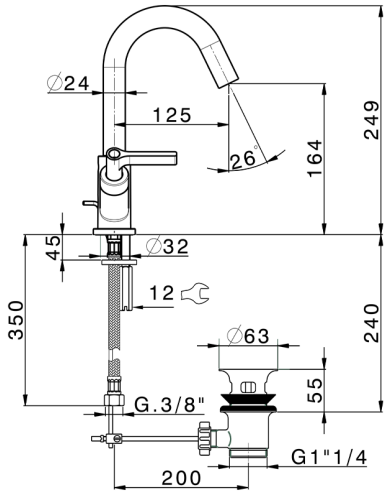

MODEL **GL000510**

Washbasin mixer,with automatic 1"1/4 automatic pop-up waste,G.3/8" stainless steel flexible hoses

AVAILABLE FINISHINGS

	**21**	21 Chrome
	**2F**	2F Brushed Nickel
	**2W**	2W Brushed Gold
	**5H**	5H Dark Brass Brushed
	**5L**	5L Brushed Black Titanium
	**6T**	6T Chrome/Matt Black

CHARACTERISTICS

2026-11-25

© 2021 Cisal. Via Pietro Durio 160 - 28010 - Alzo (NO) - Italia
Mail: cisal@cisal.it, Telefono: (+39) 0322 918111, P.Iva IT02422810032.