# Single lever tall washbasin mixer PLISSÉ SINCRONIA_I2004544

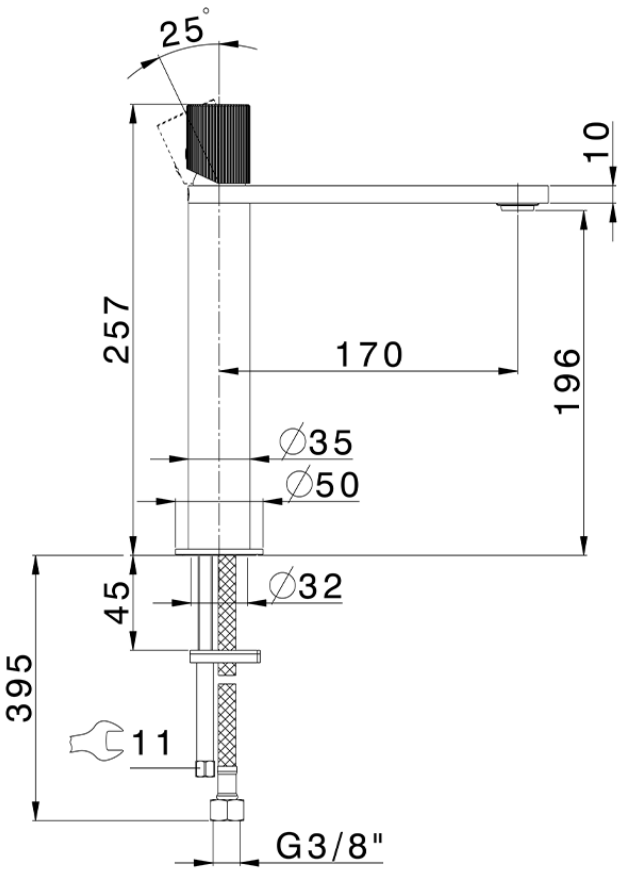




© 2021 Cisal. Via Pietro Durio 160 - 28010 - Alzo (NO) - Italia
Mail: cisal@cisal.it, Telefono: (+39) 0322 918111, P.Iva IT02422810032.