Cisal
TEL. (+39) 0322 918111
MAIL. cisal@cisal.it

Washbasin mixer TR_TR000518

MODEL **TR000518**

Washbasin mixer,with automatic 1"1/4 automatic pop-up waste,G.3/8" stainless steel flexible hoses,without handles

AVAILABLE FINISHINGS

21 21 Chrome

CHARACTERISTICS

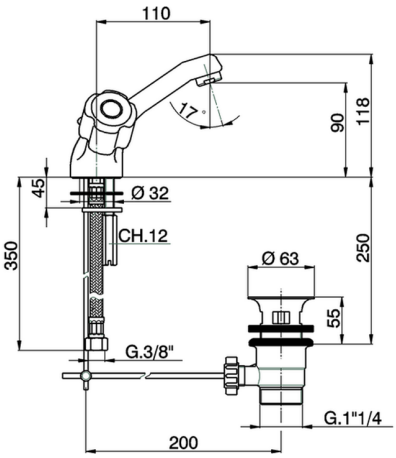

2026-06-13

© 2021 Cisal. Via Pietro Durio 160 - 28010 - Alzo (NO) - Italia
Mail: cisal@cisal.it, Telefono: (+39) 0322 918111, P.Iva IT02422810032.