Cisal
TEL. (+39) 0322 918111
MAIL. cisal@cisal.it

2-function single lever shower set SHOWER COLUMNS_C2004033

MODEL **C2004033**

2-function single lever shower set,2 outlet deviastop,adjustable riser column,sliding shower bracket,ABS D.26 mm minimalistic one spray handshower,300 mm round showerhead 2 mm thick INOX,150 cm smooth SILVERFLEX Flexible Hose

AVAILABLE FINISHINGS

21 21 Chrome

CHARACTERISTICS

Single Lever	**1**
Cartridge Spare Parts	**ZZ95435000**

35 mm Cartridge

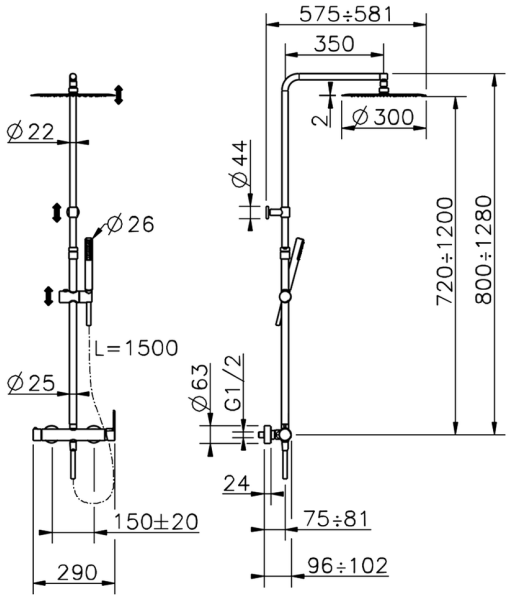

EcoStop

EcoStop feature limits water flow to approximately 50% of maximum output with one point of resistance on setting. Push slightly past the middle stop only when full water output is required. This will save water up to 50%.

© 2021 Cisal. Via Pietro Durio 160 - 28010 - Alzo (NO) - Italia
Mail: cisal@cisal.it, Telefono: (+39) 0322 918111, P.Iva IT02422810032.

Cisal
TEL. (+39) 0322 918111
MAIL. cisal@cisal.it

2-function single lever shower set SHOWER COLUMNS_C2004033

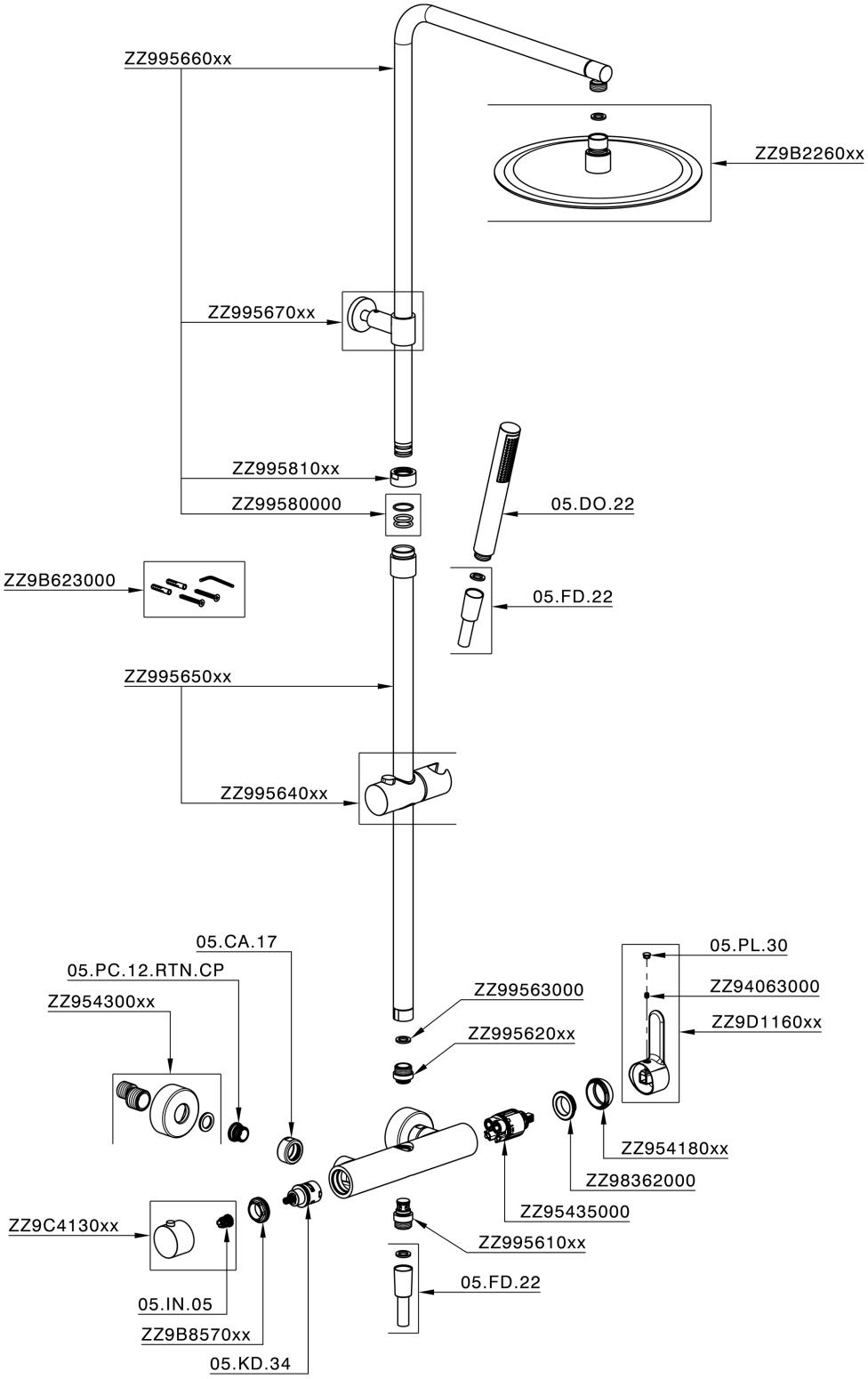

C2004033

https://en.cisal.it/2-function-single-lever-shower-set-shower-columns-c2004033

2026-03-13

© 2021 Cisal. Via Pietro Durio 160 - 28010 - Alzo (NO) - Italia
Mail: cisal@cisal.it, Telefono: (+39) 0322 918111, P.Iva IT02422810032.