Cisal
TEL. (+39) 0322 918111
MAIL. cisal@cisal.it

Flexible hose SHOWER_ZA009021

MODEL **ZA009021**

Flexible hose,150 cm PVC Flexible Hose

AVAILABLE FINISHINGS

21 21 Chrome

41 41 White

CHARACTERISTICS

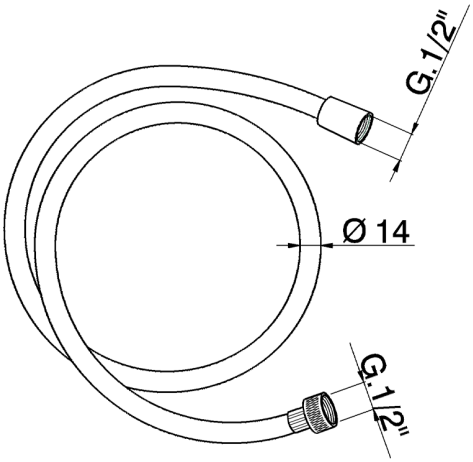

2026-01-13

© 2021 Cisal. Via Pietro Durio 160 - 28010 - Alzo (NO) - Italia
Mail: cisal@cisal.it, Telefono: (+39) 0322 918111, P.Iva IT02422810032.