Cisal
TEL. (+39) 0322 918111
MAIL. cisal@cisal.it

Single lever sink mixer Energysave KITCHEN_C2000585

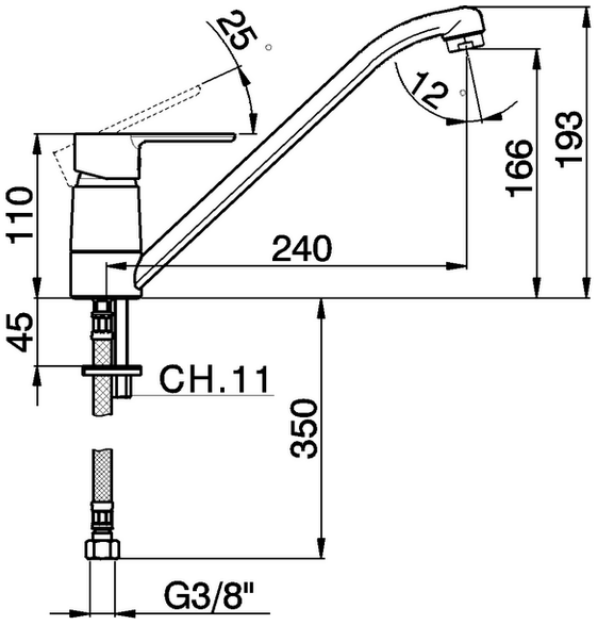

C2000585

https://en.cisal.it/single-lever-sink-mixer-energysave-kitchen-c2000585

2026-01-13

© 2021 Cisal. Via Pietro Durio 160 - 28010 - Alzo (NO) - Italia
Mail: cisal@cisal.it, Telefono: (+39) 0322 918111, P.Iva IT02422810032.