**Cisal**
TEL. (+39) 0322 918111
MAIL. cisal@cisal.it

# Thermostatic bath mixer, with shower set CHERIE_CED27010

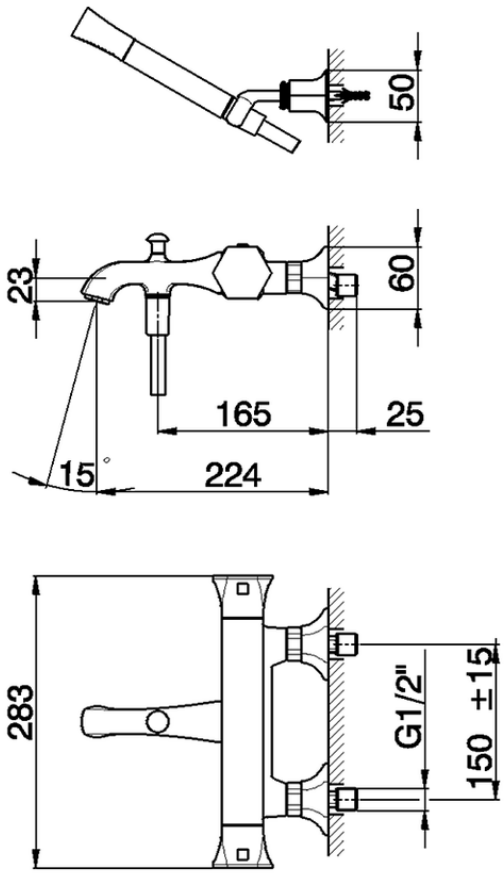


CED27010

https://en.cisal.it/thermostatic-bath-mixer-with-shower-set-cherie-ced27010

2026-02-03

© 2021 Cisal. Via Pietro Durio 160 - 28010 - Alzo (NO) - Italia
Mail: cisal@cisal.it, Telefono: (+39) 0322 918111, P.Iva IT02422810032.