Single lever bidet mixer EnergySave ALMA_A3002555

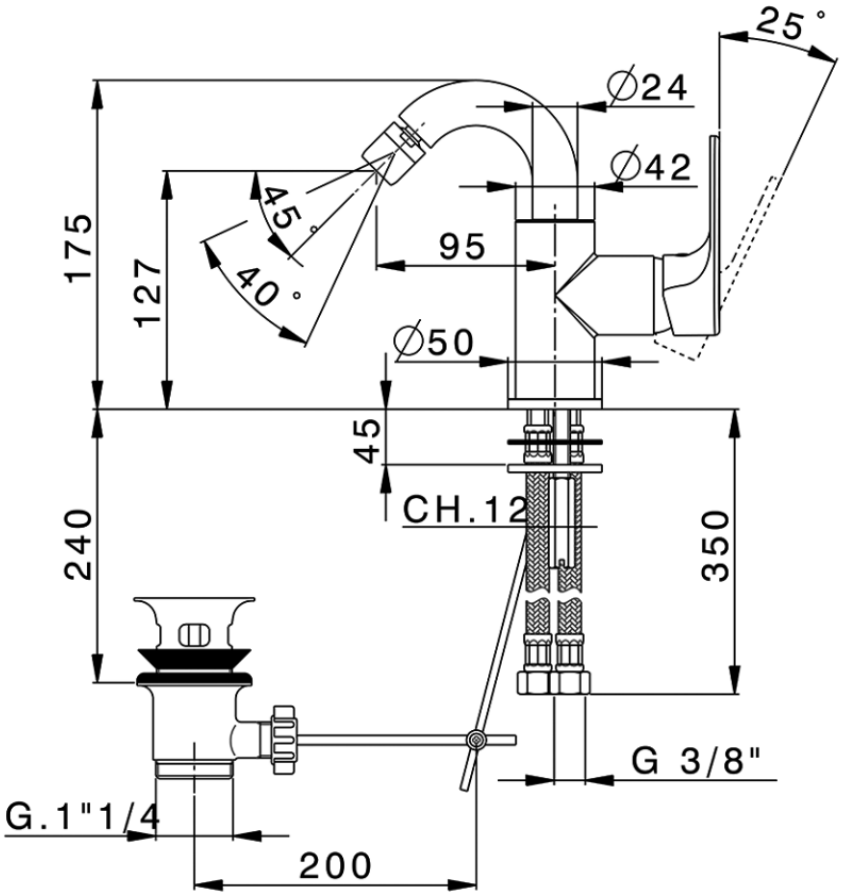

A3002555

https://en.cisal.it/single-lever-bidet-mixer-energysave-alma-a3002555

2026-04-09

© 2021 Cisal. Via Pietro Durio 160 - 28010 - Alzo (NO) - Italia
Mail: cisal@cisal.it, Telefono: (+39) 0322 918111, P.Iva IT02422810032.