Cisal
TEL. (+39) 0322 918111
MAIL. cisal@cisal.it

Free-Standing Bath/S.Thermo Set SLIM_SMT39010

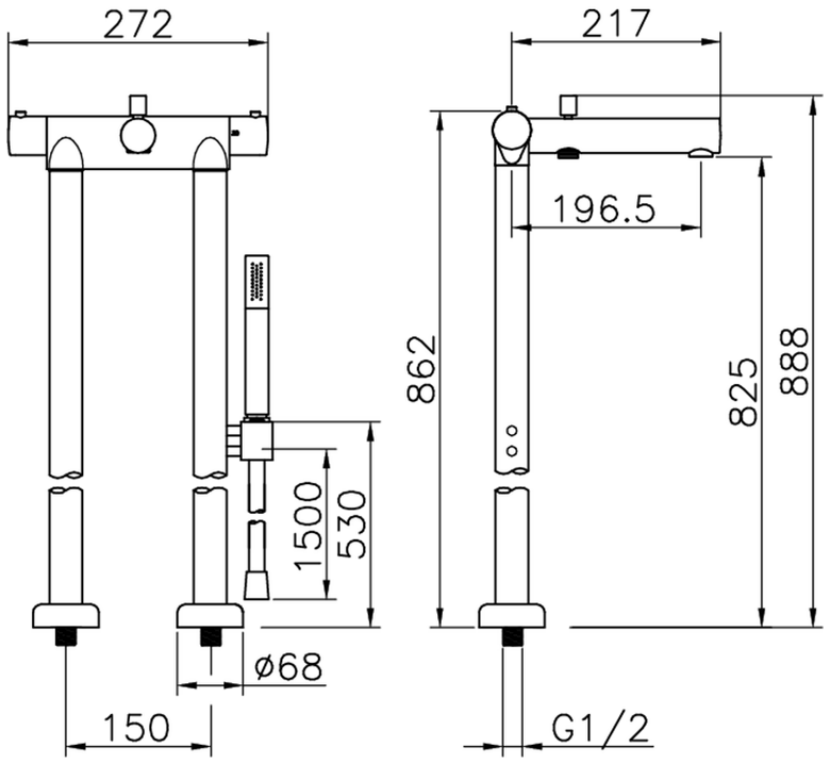

SMT39010

https://en.cisal.it/free-standing-bath-s-thermo-set-slim-smt39010

2026-05-17

© 2021 Cisal. Via Pietro Durio 160 - 28010 - Alzo (NO) - Italia
Mail: cisal@cisal.it, Telefono: (+39) 0322 918111, P.Iva IT02422810032.