Cisal
TEL. (+39) 0322 918111
MAIL. cisal@cisal.it

Single lever bidet mixer NUOVA LESS_LN000550

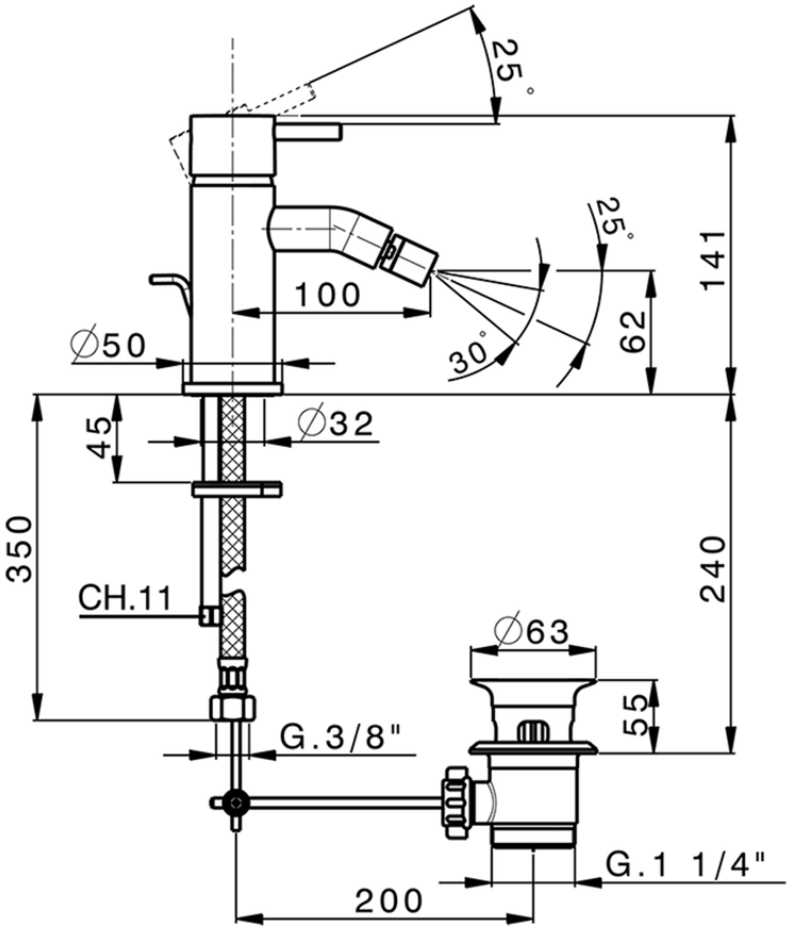

LN000550

https://en.cisal.it/single-lever-bidet-mixer-nuova-less-ln000550

2026-06-25

© 2021 Cisal. Via Pietro Durio 160 - 28010 - Alzo (NO) - Italia
Mail: cisal@cisal.it, Telefono: (+39) 0322 918111, P.Iva IT02422810032.