Cisal
TEL. (+39) 0322 918111
MAIL. cisal@cisal.it

Exposed part for Single Lever One Box Valve SLIM_SM0BM030

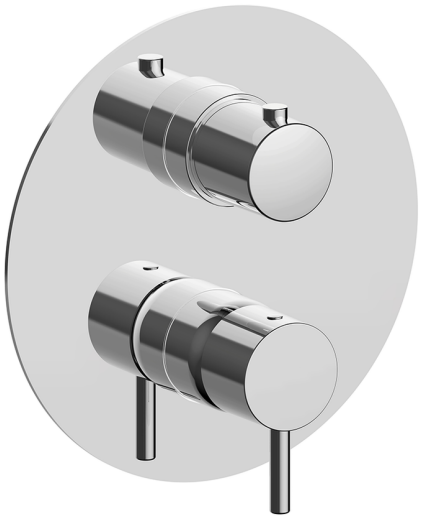

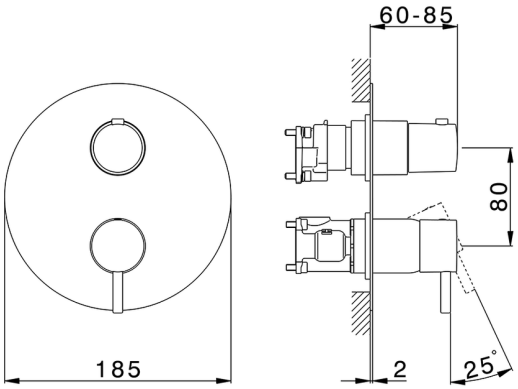

MODEL **SM0BM030**

Exposed part for Single Lever One Box Valve,with 2-3 outlet diverter,Minimum depth of installation: 67 mm,without concealed part,for items ZA00B030-ZA00B031

AVAILABLE FINISHINGS

21 21 Chrome

2B 2B Polished Nickel

40 40 Matt Black

4Q 4Q Matt White

CHARACTERISTICS

Cartridge Spare Parts	**ZZ97179000**
35 mm Cartridge	
Installation	**Concealed**
Required concealed parts	**ZA00B031**
	ZA00B030

© 2021 Cisal. Via Pietro Durio 160 - 28010 - Alzo (NO) - Italia
Mail: cisal@cisal.it, Telefono: (+39) 0322 918111, P.Iva IT02422810032.

Cisal
TEL. (+39) 0322 918111
MAIL. cisal@cisal.it

Exposed part for Single Lever One Box Valve SLIM_SM0BM030

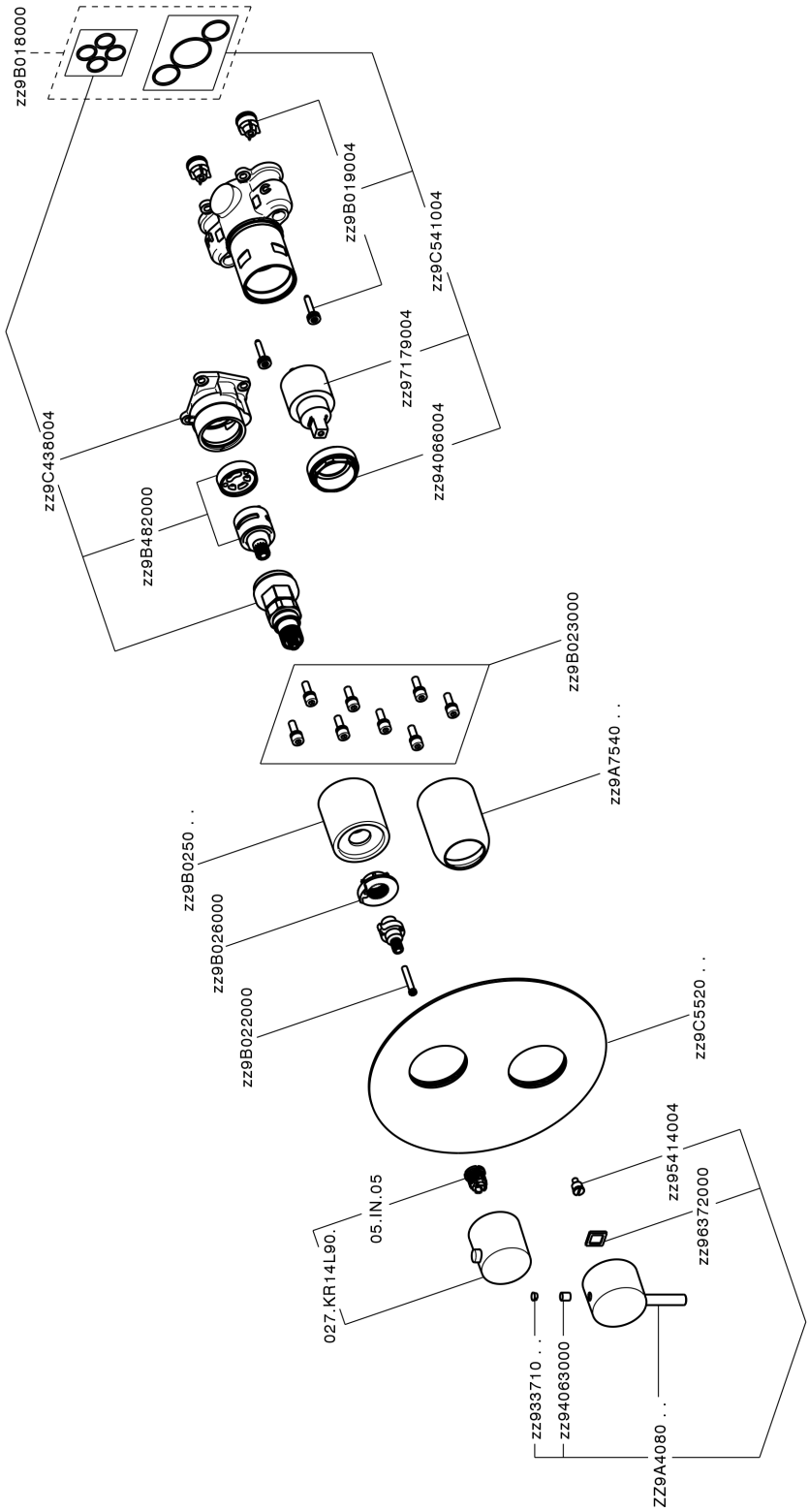

SM0BM030 https://en.cisal.it/exposed-part-for-single-lever-one-box-valve-slim-sm0bm030

© 2021 Cisal. Via Pietro Durio 160 - 28010 - Alzo (NO) - Italia
Mail: cisal@cisal.it, Telefono: (+39) 0322 918111, P.Iva IT02422810032.

Cisal
TEL. (+39) 0322 918111
MAIL. cisal@cisal.it

One Box Universal Concealed Part ONE BOX_ZA00B031

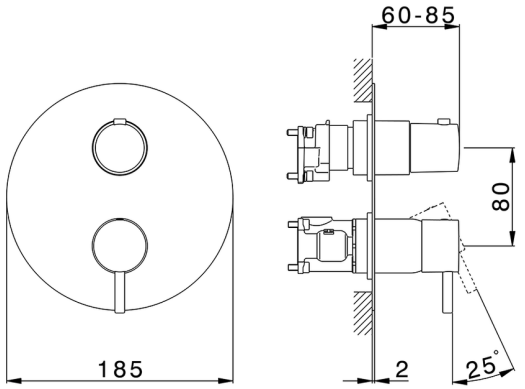

MODEL **ZA00B031**

One Box Universal Concealed Part,for 1,2 or 3 outlet thermostatic or single lever,without trim kit,with noise reducers,with sealing gasket

AVAILABLE FINISHINGS

04 04 Without finishing

CHARACTERISTICS

Concealed	**1**

Thermostatic

The Cisal thermostatic is your personal water manager, helping you to handle, control and save water and energy.

© 2021 Cisal. Via Pietro Durio 160 - 28010 - Alzo (NO) - Italia
Mail: cisal@cisal.it, Telefono: (+39) 0322 918111, P.Iva IT02422810032.

Cisal
TEL. (+39) 0322 918111
MAIL. cisal@cisal.it

One Box Universal Concealed Part ONE BOX_ZA00B030

MODEL **ZA00B030**

One Box Universal Concealed Part,for 1,2 or 3 outlet thermostatic or single lever,without trim kit,without noise reducers,with sealing gasket

AVAILABLE FINISHINGS

04 04 Without finishing

CHARACTERISTICS

Thermostatic

The Cisal thermostatic is your personal water manager, helping you to handle, control and save water and energy.

2026-11-24

© 2021 Cisal. Via Pietro Durio 160 - 28010 - Alzo (NO) - Italia
Mail: cisal@cisal.it, Telefono: (+39) 0322 918111, P.Iva IT02422810032.