Cisal
TEL. (+39) 0322 918111
MAIL. cisal@cisal.it

Thermostatic shower column, 2-functions SHOWER COLUMNS_LVC78030

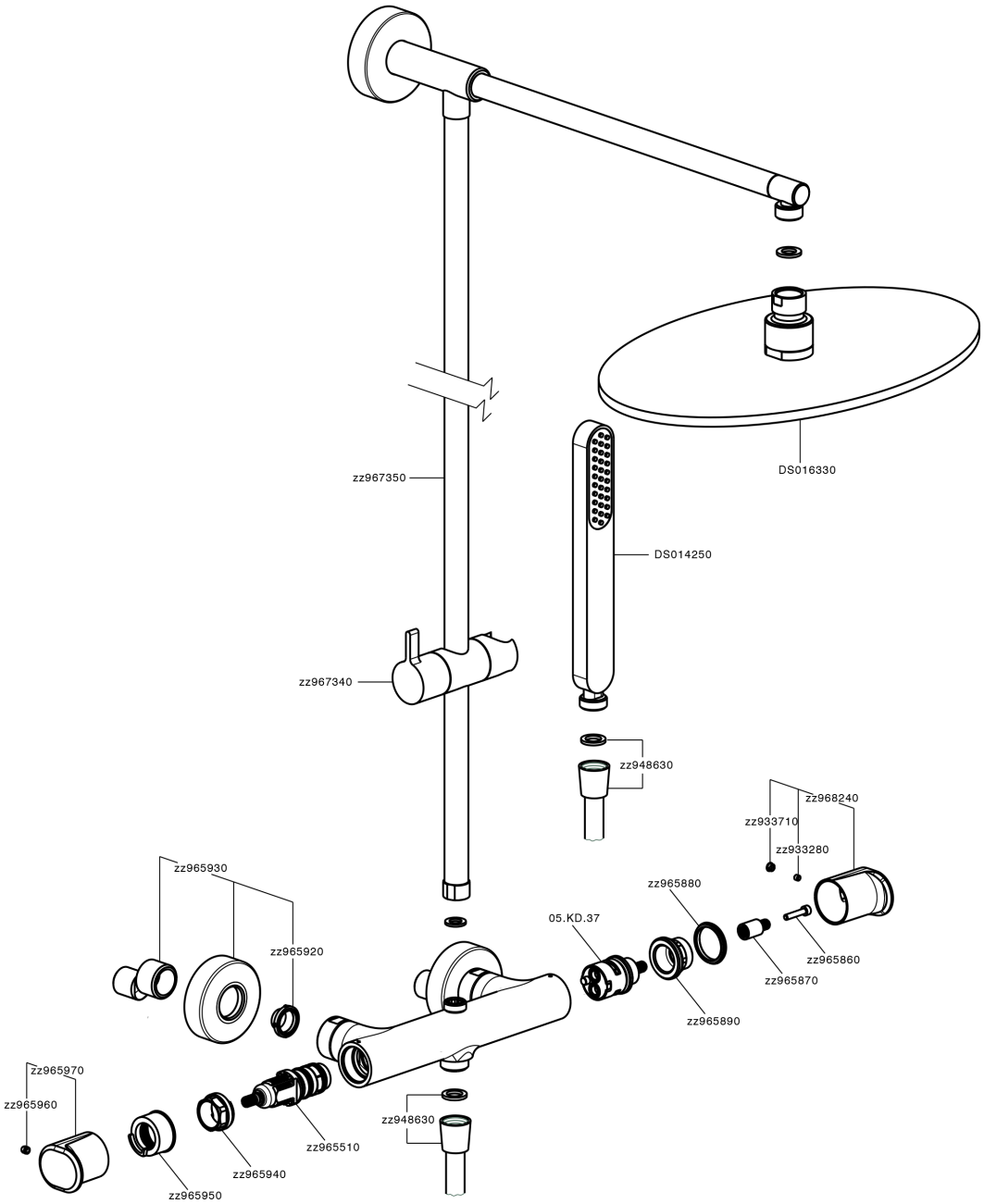

LVC78030 https://en.cisal.it/thermostatic-shower-column-2-functions-shower-columns-lvc78030

2026-04-05

© 2021 Cisal. Via Pietro Durio 160 - 28010 - Alzo (NO) - Italia
Mail: cisal@cisal.it, Telefono: (+39) 0322 918111, P.Iva IT02422810032.