**Cisal**
TEL. (+39) 0322 918111
MAIL. cisal@cisal.it

# Single lever washbasin mixer MITO3_M3000510

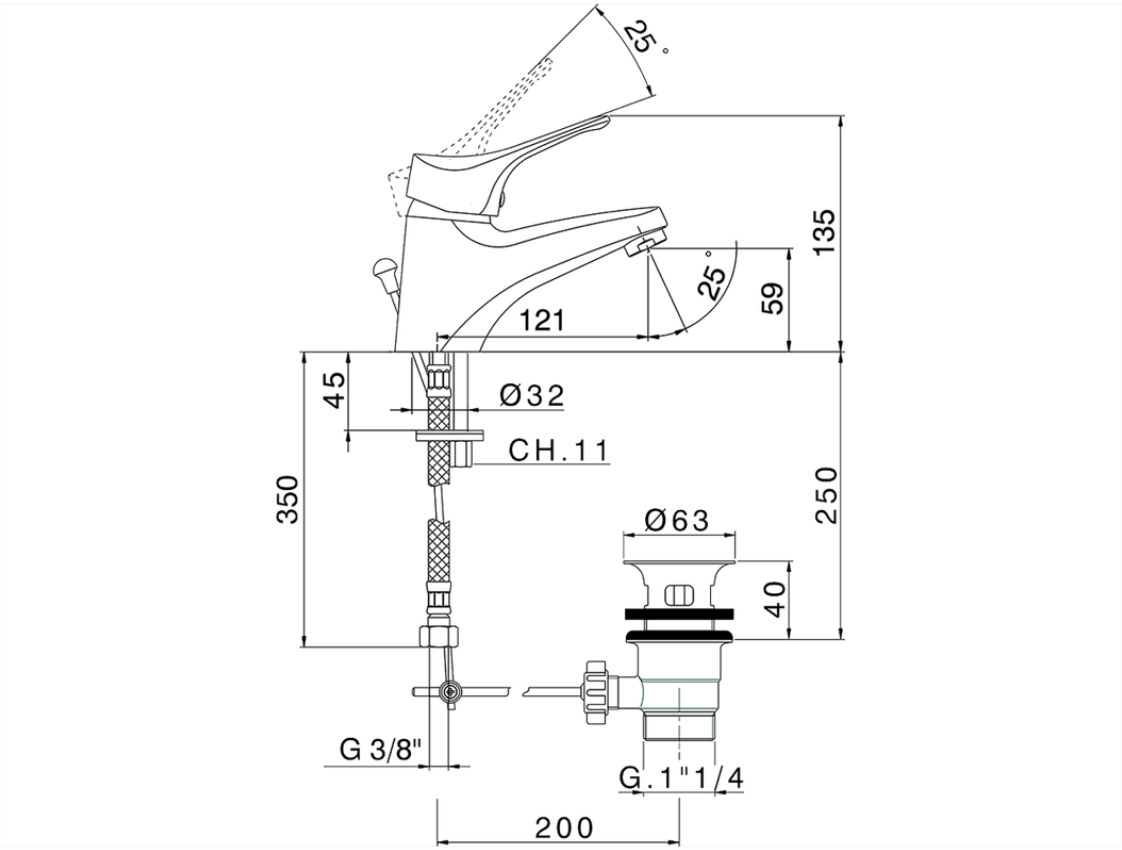


M3000510

https://en.cisal.it/single-lever-washbasin-mixer-mito3-m3000510

2026-06-24

© 2021 Cisal. Via Pietro Durio 160 - 28010 - Alzo (NO) - Italia
Mail: cisal@cisal.it, Telefono: (+39) 0322 918111, P.Iva IT02422810032.