Cisal
TEL. (+39) 0322 918111
MAIL. cisal@cisal.it

Stopvalve exposed part GRACE_MN003310

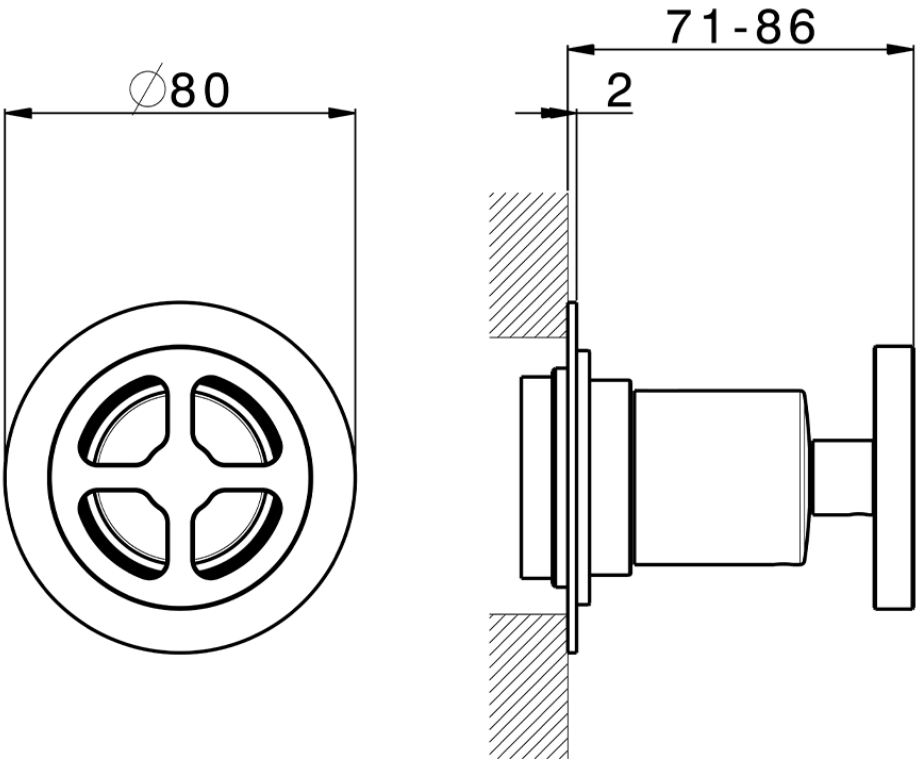

MN003310

https://en.cisal.it/stopvalve-exposed-part-grace-mn003310

© 2021 Cisal. Via Pietro Durio 160 - 28010 - Alzo (NO) - Italia
Mail: cisal@cisal.it, Telefono: (+39) 0322 918111, P.Iva IT02422810032.

Cisal
TEL. (+39) 0322 918111
MAIL. cisal@cisal.it

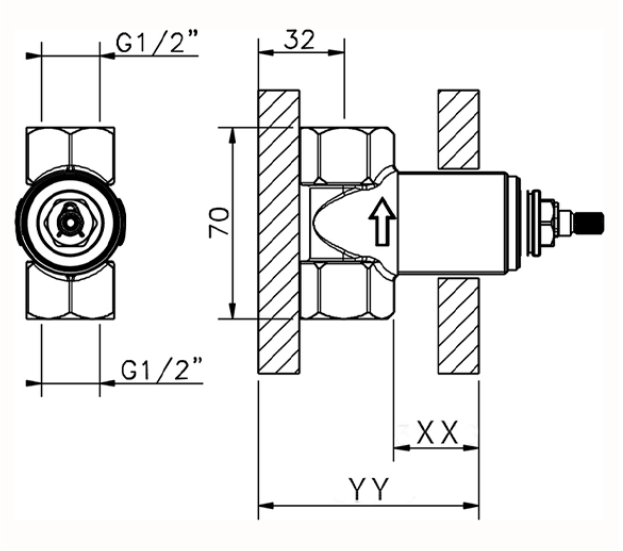

Piastra/Plate/Plaque/Platte/Placa
2-3mm: XX 31-46 YY 80-95
10mm: XX 25-40 YY 76-91

ZA003340

https://en.cisal.it/1-2-stopvalve-concealed-part-concealed-za003340

© 2021 Cisal. Via Pietro Durio 160 - 28010 - Alzo (NO) - Italia
Mail: cisal@cisal.it, Telefono: (+39) 0322 918111, P.Iva IT02422810032.

Cisal
TEL. (+39) 0322 918111
MAIL. cisal@cisal.it

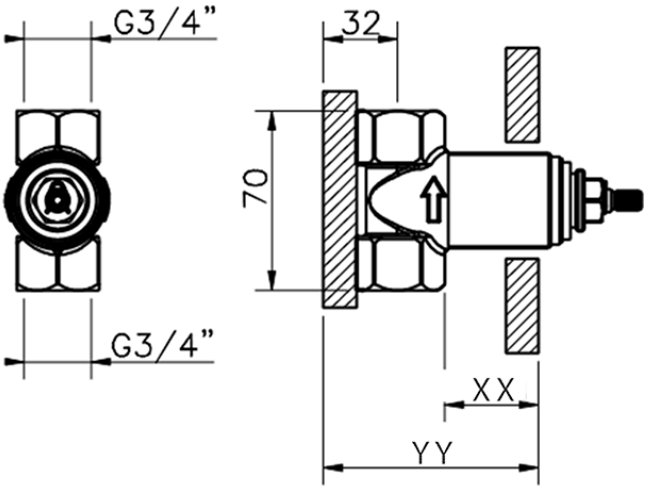

Piastra/Plate/Plaque/Platte/Placa
2-3mm: XX 31-46 YY 80-95
10mm: XX 25-40 YY 76-91

ZA003330

https://en.cisal.it/3-4-stopvalve-concealed-part-concealed-za003330

2026-04-04

© 2021 Cisal. Via Pietro Durio 160 - 28010 - Alzo (NO) - Italia
Mail: cisal@cisal.it, Telefono: (+39) 0322 918111, P.Iva IT02422810032.