Cisal
TEL. (+39) 0322 918111
MAIL. cisal@cisal.it

Double towel holder BATHROOM ACCESSORIES_SY090200

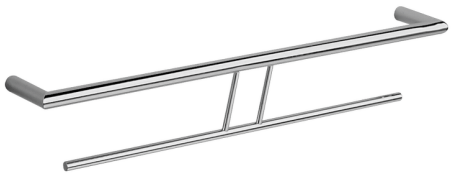

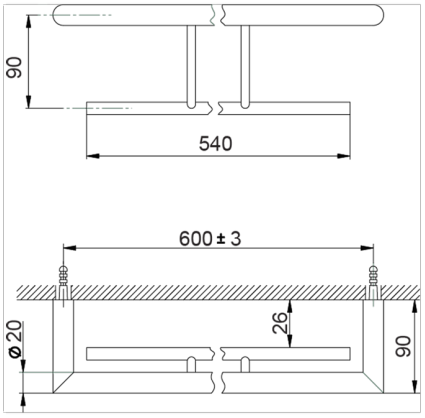

MODEL **SY090200**

Double towel holder

AVAILABLE FINISHINGS

- **21** 21 Chrome
- **2B** 2B Polished Nickel
- **2F** 2F Brushed Nickel
- **2P** 2P Rose Gold
- **2Q** 2Q Black Titanium
- **40** 40 Matt Black
- **4Q** 4Q Matt White

CHARACTERISTICS

© 2021 Cisal. Via Pietro Durio 160 - 28010 - Alzo (NO) - Italia
Mail: cisal@cisal.it, Telefono: (+39) 0322 918111, P.Iva IT02422810032.

Cisal
TEL. (+39) 0322 918111
MAIL. cisal@cisal.it

Double towel holder BATHROOM ACCESSORIES_SY090200

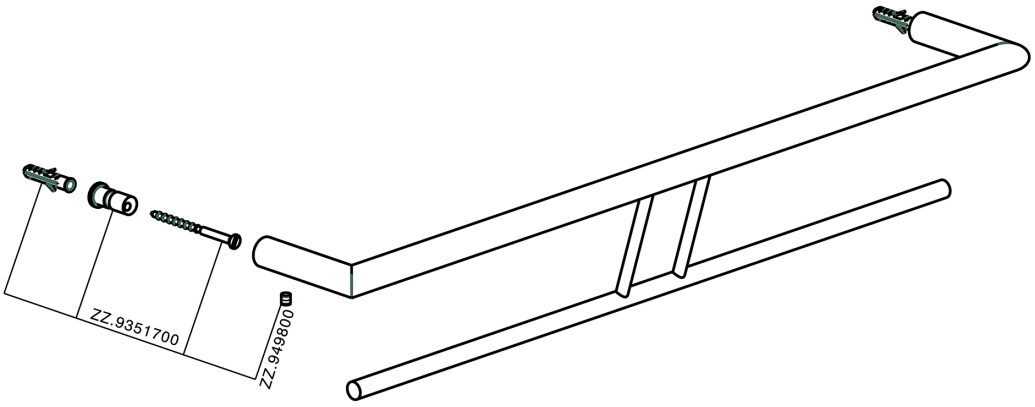

SY090200

https://en.cisal.it/double-towel-holder-bathroom-accessories-sy090200

2026-09-16

© 2021 Cisal. Via Pietro Durio 160 - 28010 - Alzo (NO) - Italia
Mail: cisal@cisal.it, Telefono: (+39) 0322 918111, P.Iva IT02422810032.