Cisal
TEL. (+39) 0322 918111
MAIL. cisal@cisal.it

Free-Standing Bath/S.Thermo Set NUOVA LESS_LNT39010

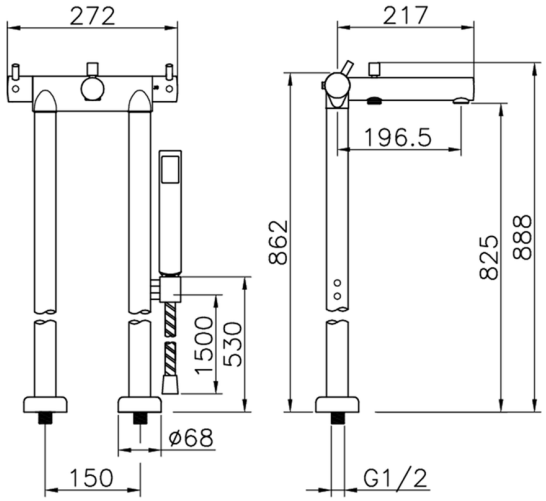

MODEL **LNT39010**

Free-Standing Bath/S.Thermo Set,Brass minimalistic one spray handshower,150 cm smooth SILVERFLEX Flexible Hose

AVAILABLE FINISHINGS

21 21 Chrome

2F 2F Brushed Nickel

40 40 Matt Black

4Q 4Q Matt White

CHARACTERISTICS

Cartridge Spare Parts **24.04A.PP**

8x20 Plus P Thermostatic Valve

Thermostatic

The Cisal thermostatic is your personal water manager, helping you to handle, control and save water and energy.

2026-02-27

© 2021 Cisal. Via Pietro Durio 160 - 28010 - Alzo (NO) - Italia
Mail: cisal@cisal.it, Telefono: (+39) 0322 918111, P.Iva IT02422810032.